Power analyzer

CVM-D41 DC



INSTRUCTION MANUAL

(M337B01-03-25A)

CE


22
PAP

SAFETY PRECAUTIONS

Follow the warnings described in this manual with the symbols shown below.



DANGER
Warns of a risk, which could result in personal injury or material damage.



ATTENTION
Indicates that special attention should be paid to a specific point.

If you must handle the unit for its installation, start-up or maintenance, the following should be taken into consideration:



Incorrect handling or installation of the device may result in injury to personnel as well as damage to the device. In particular, handling with voltages applied may result in electric shock, which may cause death or serious injury to personnel. Defective installation or maintenance may also lead to the risk of fire.

Read the manual carefully prior to connecting the device. Follow all installation and maintenance instructions throughout the device's working life. Pay special attention to the installation standards of the National Electrical Code.



Refer to the instruction manual before using the device

In this manual, if the instructions marked with this symbol are not respected or carried out correctly, it can result in injury or damage to the device and / or installations.

CIRCUTOR S.A.U. reserves the right to modify features or the product manual without prior notification.

DISCLAIMER

CIRCUTOR S.A.U. reserves the right to make modifications to the device or the unit specifications set out in this instruction manual without prior notice.

CIRCUTOR S.A.U. on its web site, supplies its customers with the latest versions of the device specifications and the most updated manuals.

www.circutor.com





CIRCUTOR S.A.U. recommends using the original cables and accessories that are supplied with the device.

CONTENTS

SAFETY PRECAUTIONS 3
DISCLAIMER 3
CONTENTS 4
REVISION LOG 6
SYMBOLS 6
1.- VERIFICATION UPON RECEPTION 7
2.- PRODUCT DESCRIPTION 7
3.- DEVICE INSTALLATION 8
3.1.- PRIOR RECOMMENDATIONS 8
3.2.- INSTALLATION 8
3.3.- DEVICE TERMINALS 9
3.4.- CONNECTION DIAGRAM 10
3.4.1.- VOLTAGE AND CURRENT MEASUREMENT WITH SHUNT AT THE NEGATIVE POLE OF THE INSTALLATION 10
3.4.2.- VOLTAGE AND CURRENT MEASUREMENT WITH SHUNT AT THE POSITIVE POLE OF THE INSTALLATION 11
3.4.3.- VOLTAGE MEASUREMENT 12
3.4.4.- CURRENT MEASUREMENT WITH SHUNT AT THE NEGATIVE POLE OF THE INSTALLATION 13
3.4.5.- CURRENT MEASUREMENT WITH SHUNT AT THE POSITIVE POLE OF THE INSTALLATION 14
4.- OPERATION 15
4.1.- DISPLAY 15
4.2.- KEYBOARD FUNCTIONS 15
4.3.- LEDs 16
4.4.- RELAY OUTPUTS 16
4.5.- ANALOG OUTPUT 17
4.6.- DIGITAL INPUTS 17
4.7.- DISPLAY 17
4.7.1.- MAXIMUM & MINIMUM VALUES 18
4.7.2.- TOTALISERS 19
5.- CONFIGURATION 20
5.1.- CONFIGURATION OF THE INPUT 22
5.1.1.- VOLTAGE DISPLAY VALUE 23
5.1.2.- VOLTAGE MEASUREMENT RANGE 23
5.1.3.- CURRENT DISPLAY VALUE 24
5.1.4.- CURRENT INPUT 24
5.1.5.- SHUNT POSITION 25
5.1.6.- DECIMAL POINT FOR DISPLAYING VOLTAGE 25
5.1.7.- SAVE CONFIGURATION 25
5.2.- RS-485 COMMUNICATIONS 26
5.2.1.- MODBUS ADDRESS 27
5.2.2.- BAUD RATE 27
5.2.3.- DATA FORMAT 28
5.2.4.- SAVE CONFIGURATION 28
5.3.- ANALOG OUTPUT 28
5.3.1.- TYPE OF OUTPUT 29
5.3.2.- ANALOG OUTPUT PARAMETER 30
5.3.3.- READING FOR THE START OF THE ANALOG OUTPUT 30
5.3.4.-READING FOR THE END OF THE ANALOG OUTPUT 31
5.3.5.- SAVE CONFIGURATION 31
5.4.- RELAY OUTPUT 1 32
5.4.1.- RELAY MODE 32
5.4.2.- RELAY PULSE DURATION 33
5.4.3.- ALARM PARAMETER 33
5.4.4.- CONNECTION DELAY 34
5.4.5.- ALARM VALUE 35
5.4.6.- HYSTERESIS 35
5.4.7.- SAVE CONFIGURATION 35
5.5.- RELAY OUTPUT 2 36
5.6.- CONFIGURATION OF THE DISPLAY 36
5.6.1.- LOGIN PASSWORD 37
5.6.2.- CYCLIC DISPLAY 38

5.6.3.- BACKLIGHT OF THE DISPLAY 38
5.6.4.- LIGHT ALARM 39
5.6.5.-DISPLAY HOME SCREEN 39
5.6.6.- REFRESH TIME 40
5.6.7.- DELETING THE MAXIMUM & MINIMUM VALUES 40
5.6.8.- DELETING THE ELECTRICAL CHARGE TOTALISERS 41
5.6.9.- DELETING THE ENERGY TOTALISERS 41
5.6.10.- SAVE CONFIGURATION 42
5.7.- SOFTWARE VERSION 42
6.- RS-485 COMMUNICATIONS 43
6.1.- CONNECTIONS 43
6.2.- MODBUS PROTOCOL 44
6.2.1. READING EXAMPLE: FUNCTION 0x01 44
6.2.2. EXAMPLE OF OPERATION OF THE REMOTE CONTROL: FUNCTION 0x05. 44
6.3.- MODBUS COMMANDS 45
6.3.1.- MEASUREMENT VARIABLES AND DEVICE STATUS 45
6.3.2.- RELAY OUTPUTS 46
6.3.3.- DIGITAL INPUTS 47
6.3.4.- REMOTE CONTROL OUTPUT (Relay output) 47
6.3.5.- DELETING VALUES 47
7.- TECHNICAL FEATURES 51
8.- MAINTENANCE AND TECHNICAL SERVICE 54
9.- GUARANTEE 54
10.- EU DECLARATION OF CONFORMITY 55
ANNEX A.- CONFIGURATION MENU 58

REVISION LOG

Table 1: Revision log.

Date	Revision	Description
04/22	M337B01-03-21A	Initial version
09/22	M337B01-03-22A	Changes in the following sections: 3.4. - 5.1. - 5.1.5. - 6.3.6.1. - Annex A
11/23	M337B01-03-23A	Changes in the following sections: 7.
05/25	M337B01-03-25A	Changes in the following sections: 3.4.2. - 7.

SYMBOLS

Table 2: Symbols.

Symbol	Description
CE	In compliance with the relevant European directive.
	Device covered by European directive 2012/19/EC. At the end of its useful life, do not leave the unit in a household waste container. Follow local regulations on electronic equipment recycling.
⎓	DC current
~	AC current

Note: *Devices images are for illustrative purposes only and may differ from the actual device.*

1.- VERIFICATION UPON RECEPTION

Check the following points when you receive the device:

a) The device meets the specifications described in your order.
b) The device has not suffered any damage during transport.
c) Perform an external visual inspection of the device prior to switching it on.
d) Check that it has been delivered with the following:

- An installation guide,



If any problem is noticed upon reception, immediately contact the transport company and/or **CIRCUTOR's** after-sales service.

2.- PRODUCT DESCRIPTION

The **CVM-D41 DC** is designed to measure and display the DC voltage, DC current, power, energy and electric charge.



The device features:

- **4 keys** that allow you to browse between the various screens and program the device.
- **LED display**, displays all parameters.
- **2** fully programmable **relay outputs**
- **2 digital inputs**.
- **1** programmable **analog output**, voltage or current.
- Communications **RS-485**.

CIRCUTOR has different models, see **Table 3**.

Table 3: CVM-D41 DC Models.

Model		Power Supply			Analog output	
		100 ... 270 V ~	100 ... 270 V ⎓	20 ... 60 V ⎓	V	A
CVM-D41 DC	M56638	✓	✓	-	-	✓
	M566380040000	-	-	✓	-	✓
	M5663A	✓	✓	-	✓	-
	M5663A0040000	-	-	✓	✓	-

3.- DEVICE INSTALLATION

3.1.- PRIOR RECOMMENDATIONS



In order to use the device safely, it is critical that individuals who handle it follow the safety measures set out in the standards of the country where it is being used, use the necessary personal protective equipment, and pay attention to the various warnings indicated in this instruction manual.

The **CVM-D41 DC** device must be installed by authorised and qualified staff.

The power supply plug must be disconnected and measuring systems switched off before handling, altering the connections or replacing the device. It is dangerous to handle the device while it is powered.

Also, it is critical to keep the cables in perfect condition in order to avoid accidents, personal injury and damage to installations.

The device's functionality is limited to the category of measuring voltage or specific current values.

The manufacturer of the device is not responsible for any damage resulting from failure by the user or installer to heed the warnings and/or recommendations set out in this manual, nor for damage resulting from the use of non-original products or accessories or those made by other manufacturers.

If an anomaly or malfunction is detected in the device, do not use it to take any measurements.



Disconnect the device from the power supply (device and measuring system power supply) before maintaining, repairing or handling the device's connections.
Please contact the after-sales service if you suspect that there is an operational fault in the device.

3.2.- INSTALLATION



Terminals, opening covers or removing elements can expose parts that are hazardous to the touch while the device is powered. Do not use the device until it is fully installed.

The device should be installed inside an electric panel or enclosure, attached to a DIN rail (IEC 60715).

The device should be connected to a power circuit protected by a fuse with a maximum nominal current of **0.25 A**.

3.3.- DEVICE TERMINALS

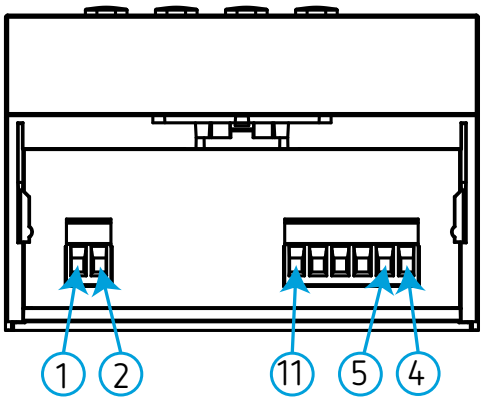

Figure 1: CVM-D41 DC terminals (Upper).

Table 4: CVM-D41 DC terminals (Upper).

Device terminals	
1: L, Power supply	**5: IU-**, Current measurement input / Voltage measurement input
2: N, Power supply	**4: I +**, Current measurement input
11: U+, Voltage measurement input	

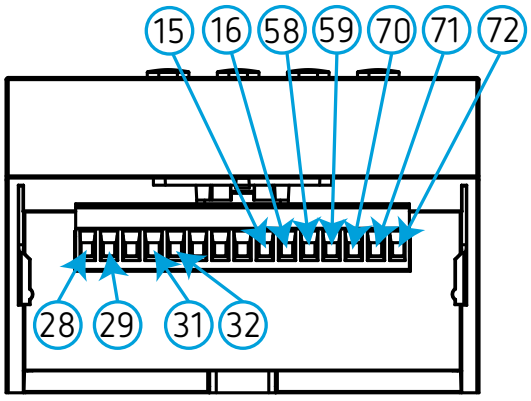

Figure 2: CVM-D41 DC terminals (down).

Table 5: CVM-D41 DC terminals (down).

Device terminals	
28: R01, Relay output 1 (Common)	**58: A**, RS-485
29: R01, Relay output 1 (NO)	**59: B**, RS-485
31: R02, Relay output 2 (Common)	**70: DIC**, Common digital inputs
32: R02, Relay output 2 (NO)	**71: 1**, Digital input 1
15: +AO, Analog output	**72: 2**, Digital input 2
16: -AO, Analog output	

3.4.- CONNECTION DIAGRAM

3.4.1.- VOLTAGE AND CURRENT MEASUREMENT WITH SHUNT AT THE NEGATIVE POLE OF THE INSTALLATION

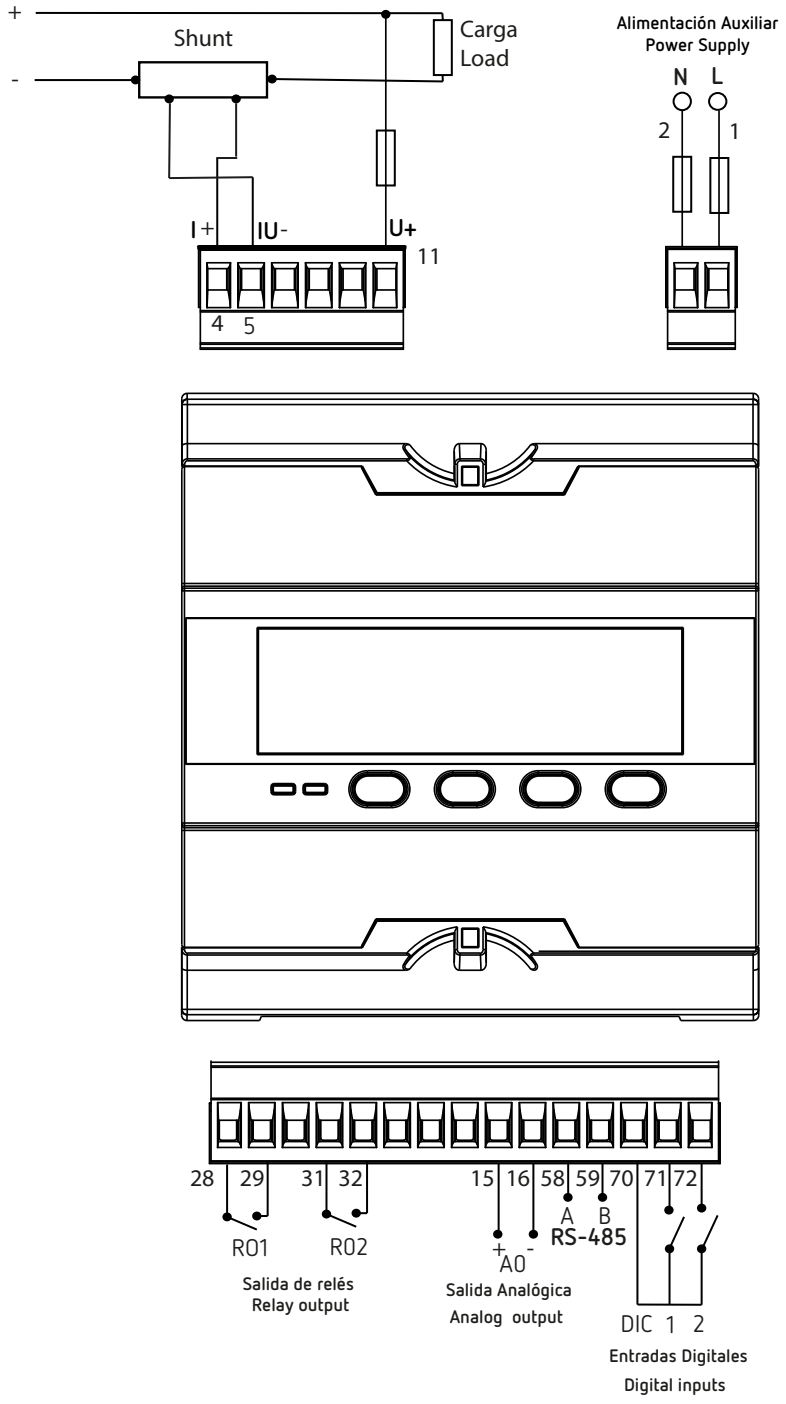

Figure 3: Voltage and current measurement (shunt negative pole).

Make sure that the positive and negative voltage terminals are as shown in the connection diagram.

Note: *In the configuration section **"5.1.5.- SHUNT POSITION"** the position of the shunt in the installation must be selected.*

3.4.2.- VOLTAGE AND CURRENT MEASUREMENT WITH SHUNT AT THE POSITIVE POLE OF THE INSTALLATION

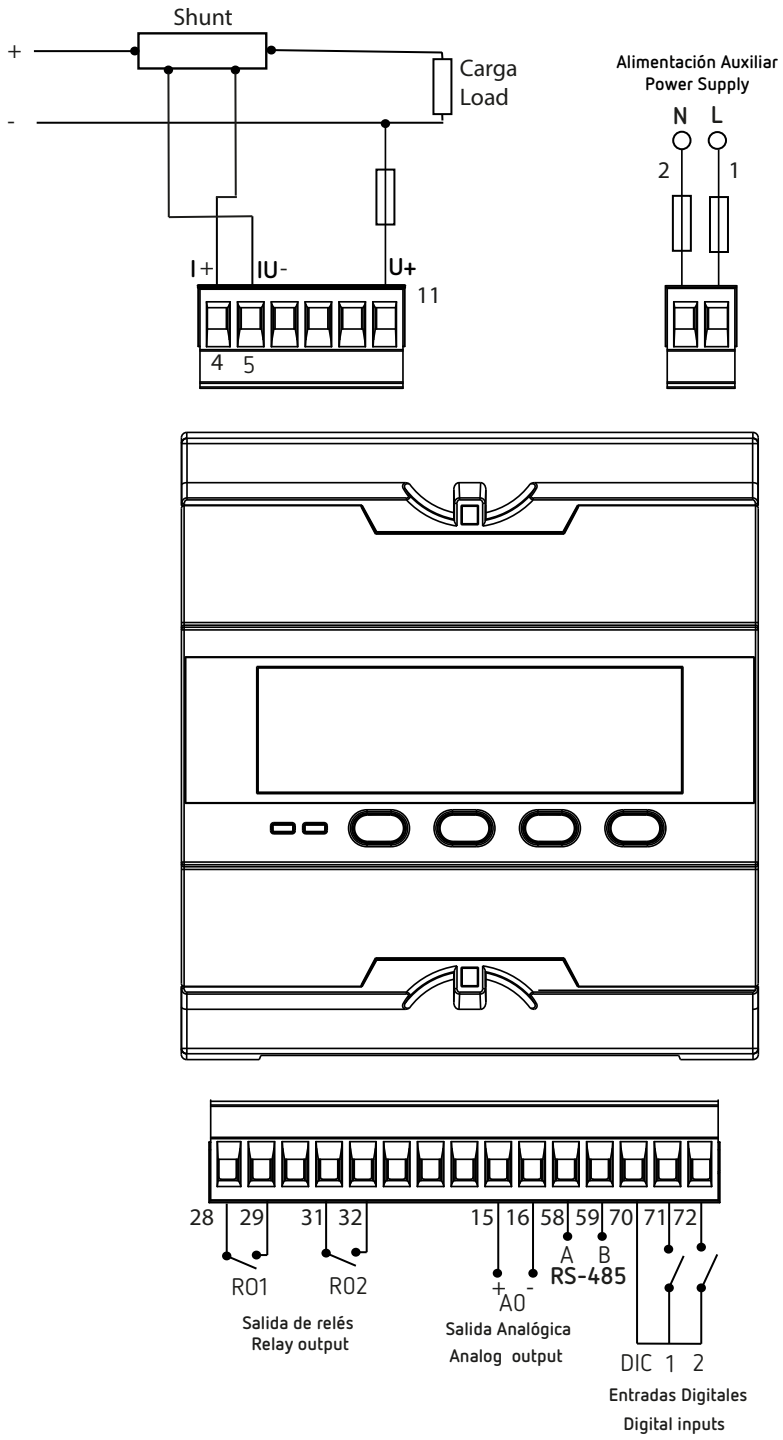

Figure 4: Voltage and current measurement (shunt positive pole).

Make sure that the positive and negative voltage terminals are as shown in the connection diagram.

Note: *In the configuration section **"5.1.5.- SHUNT POSITION"** the position of the shunt in the installation must be selected.*

3.4.3.- VOLTAGE MEASUREMENT

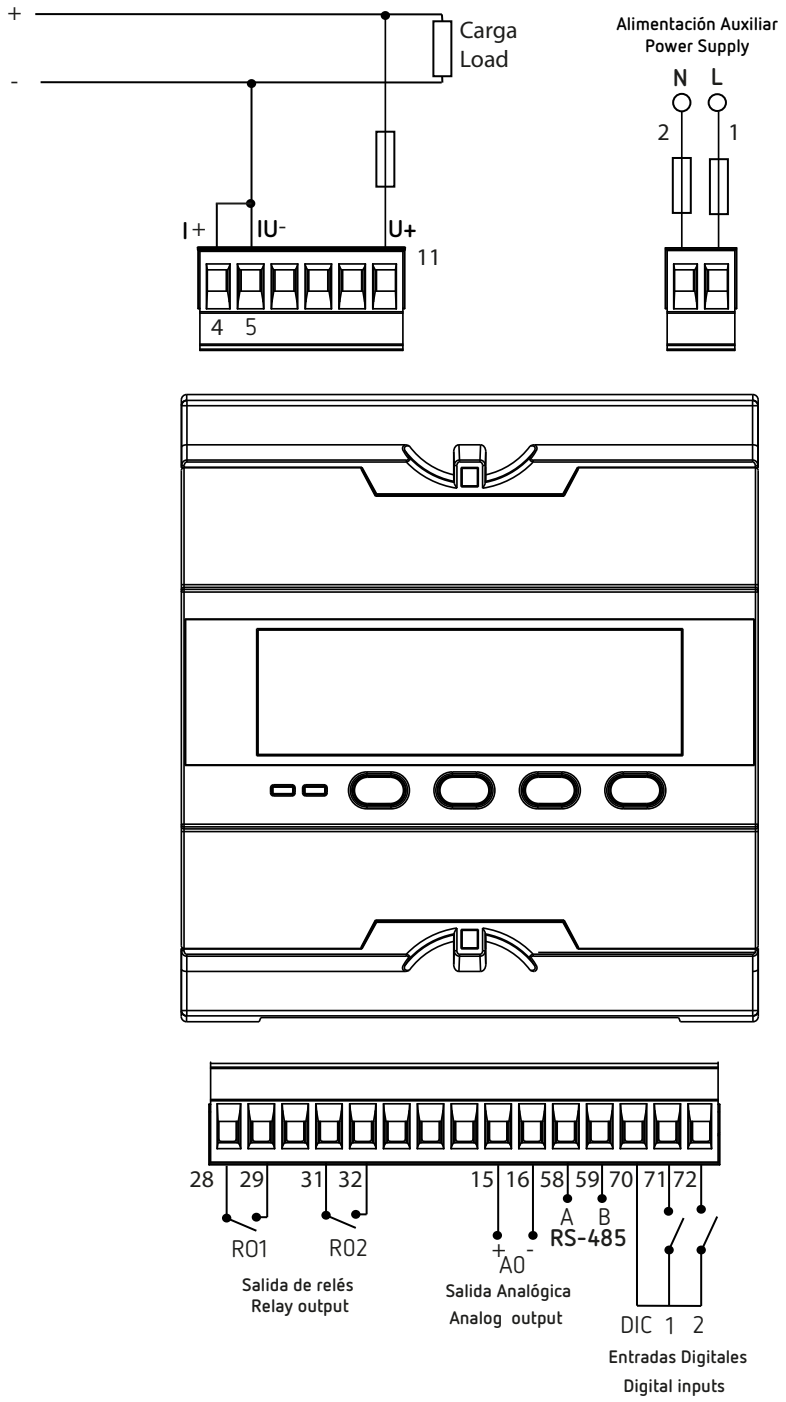

Figure 5: Voltage measurement.

Note: To keep noise from appearing on the current screen, we recommend installing a jumper between terminals 4 and 5.

3.4.4.- CURRENT MEASUREMENT WITH SHUNT AT THE NEGATIVE POLE OF THE INSTALLATION

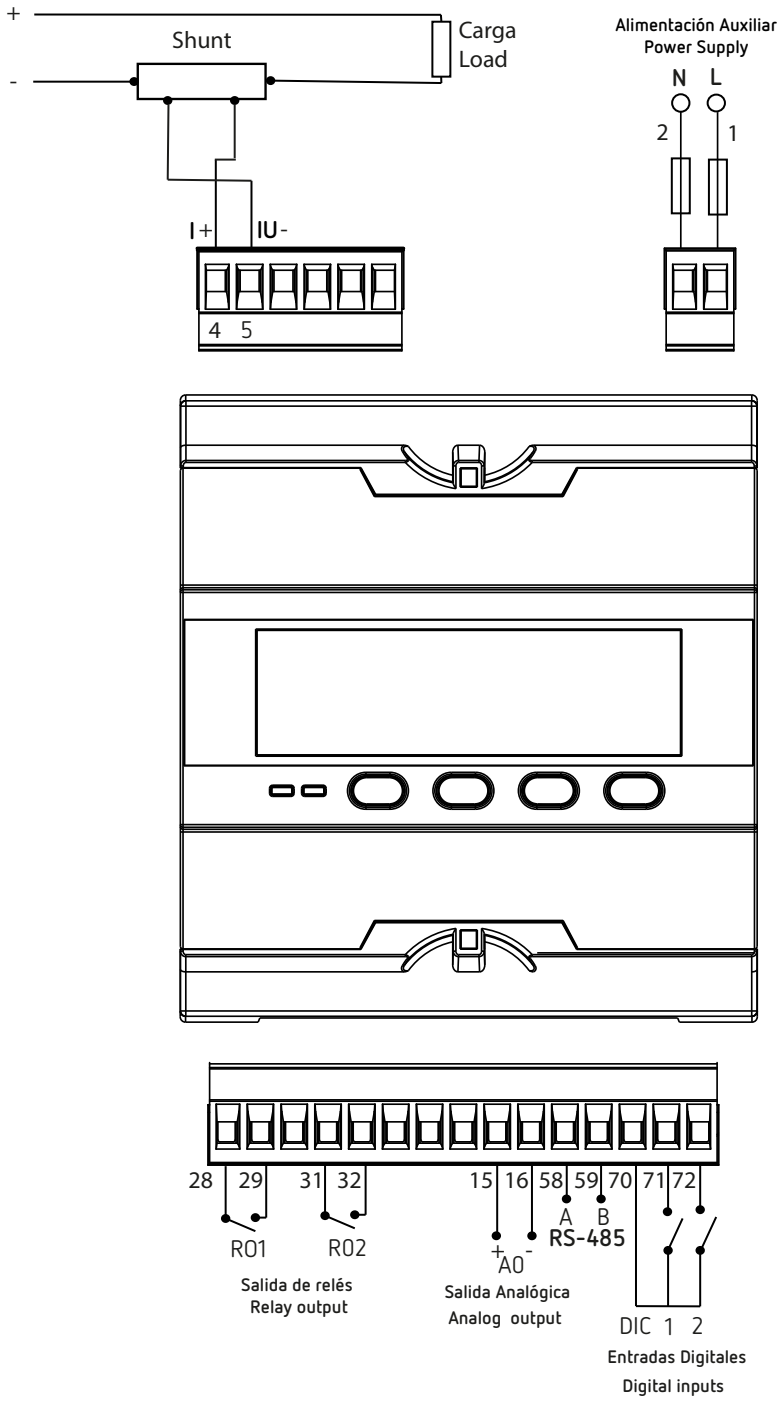

Figure 6: Current measurement (shunt negative pole).

Note: *In the configuration section **"5.1.5.- SHUNT POSITION"** the position of the shunt in the installation must be selected.*

3.4.5.- CURRENT MEASUREMENT WITH SHUNT AT THE POSITIVE POLE OF THE INSTALLATION

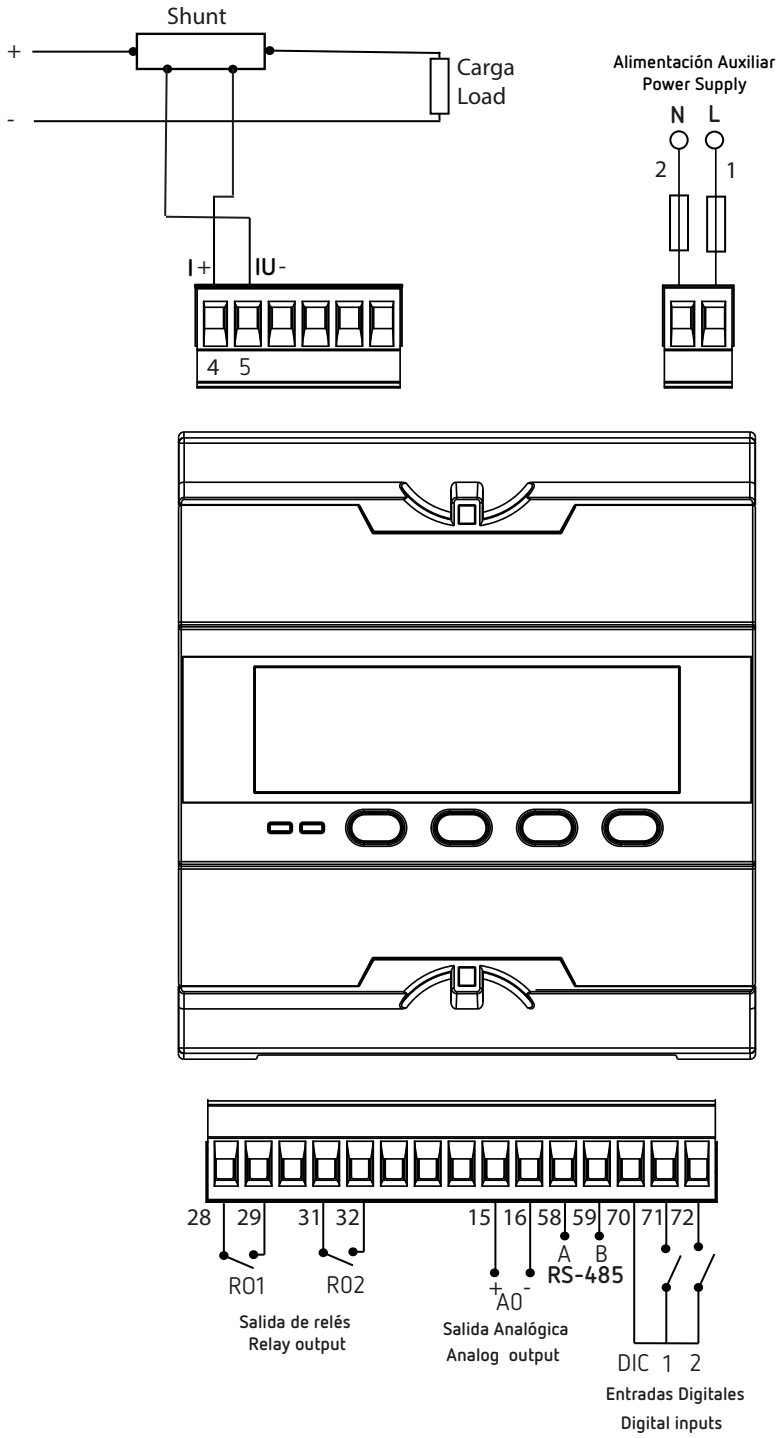

Figure 7: Current measurement (shunt positive pole).

Note: *In the configuration section **"5.1.5.- SHUNT POSITION"** the position of the shunt in the installation must be selected.*

4.- OPERATION

4.1.- DISPLAY

The device features a 5-digit LED display, which is used to display the measured parameters and to configure these parameters

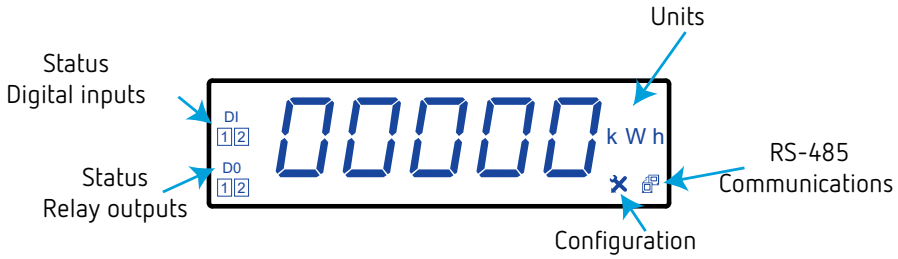

Figure 8: CVM-D41 DC display.

The display also shows:

- ✓ The status of the **digital inputs**, if an input is connected, its corresponding number flashes.
- ✓ The status of the **relay outputs**, if a relay is closed, its corresponding number flashes.

4.2.- KEYBOARD FUNCTIONS

The **CVM-D41 DC** features 4 keys to display and configure the device, **Figure 9** and **Table 6**.

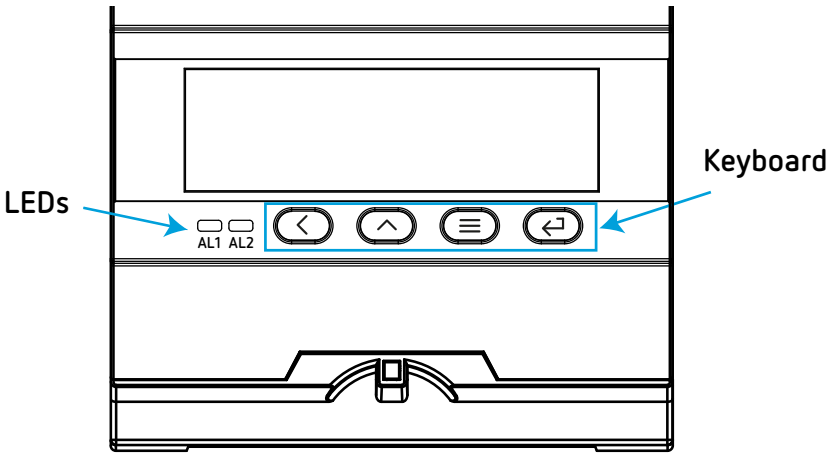

Figure 9:CVM-D41 DC Keyboard and LEDs.

Table 6: Keyboard functions.

Key	Keystroke
	Previous screen **In the configuration menu:** Scroll through the digits
	Next screen **In the configuration menu:** Increase the value of the digit

Table 6 (Continuation): Keyboard functions.

Key	Keystroke
	**Long keystroke (> 3s):** Enter in configuration menu
	**In the configuration menu:** Jump to the next level / Confirm an operation

4.3.- LEDs

The device has 2 LEDs, **AL1** and **AL2** (**Figure 9**) that are activated when Alarm 1 (**AL1**) is activated and Alarm 2 (**AL2**). The alarms on the device are configured in the settings menu: ***"5.4 - RELAY OUTPUT 1"*** and ***"5.5 - RELAY OUTPUT 2"***.

4.4.- RELAY OUTPUTS

The device features two programmable relay outputs (terminals 28, 29, 31 and 32, as shown in **Figure 10**) that can be programmed as remote control signals or alarms in the setup menu (***"5.4.- RELAY OUTPUT 1"*** and ***"5.5.- RELAY OUTPUT 2"***).

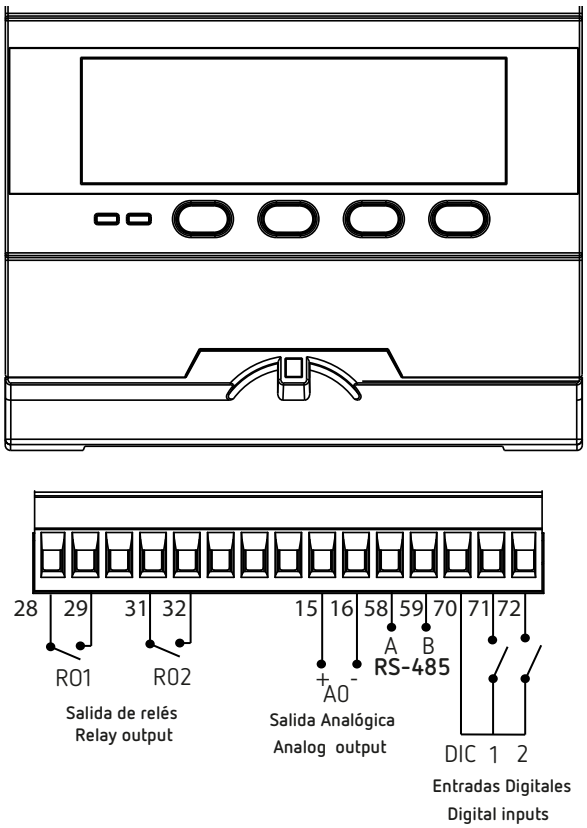

Figure 10: Relay outputs, digital inputs and Analog output.

4.5.- ANALOG OUTPUT

The device has an analog output (terminals 15 and 16 of **Figure 10**) programmable through the configuration menu (***"5.3.- ANALOG OUTPUT"***)

The analog output can be voltage or current, depending on the device model, **Table 7**:

Table 7:Device model depending on the analog output..

Model		Analog output	
		Voltage	Current
CVM-D41 DC	M56638	-	✓
	M566380040000	-	✓
	M5663A	✓	-
	M5663A0040000	✓	-

4.6.- DIGITAL INPUTS

The device has two digital inputs (terminals 70, 71 and 72 of **Figure 10**). The relay outputs can be activated depending on the value of the digital inputs (See ***"5.4.- RELAY OUTPUT 1"*** and ***"5.5.- RELAY OUTPUT 2"***)

4.7.- DISPLAY

The **CVM-D41 DC** features 7 display screens, **Table 8**. Use keys and to browse through the different screens.
The display screens can change automatically depending on the time programmed in section ***"5.6.2.- CYCLIC DISPLAY***".

Table 8: Display menu.

Display menu
 Voltage
 Current
 Power

Table 8: (Continued): Display menu.

Display menu
 Positive energy
 Negative energy
 Positive electric charge
 Negative electric charge

The home screen, meaning the first screen displayed when powering up the device or when exiting the settings menu, can be programmed in section ***"5.6.5.- DISPLAY HOME SCREEN"***.

If the value of voltage, current or power measured by the device is % higher than the nominal value, the device can make the digits on the display start flashing to provide a visual alarm. See ***"5.6.4.- LIGHT ALARM"***

4.7.1.- MAXIMUM & MINIMUM VALUES

The maximum and minimum values for the **voltage**, **current** and **power** parameters can be displayed by pressing the key ☰ while the corresponding parameter is being displayed.

When the key ☰ is first pressed the minimum value is displayed and the word **MIN** is shown at the top right of the display.

When the key ☰ is pressed for the second time , the maximum value is displayed and the word **MAX** is shown at the top right of the display.

Press the key ☰ again to return to the instantaneous value.

The maximum and minimum values can be deleted in the settings menu (***"5.6.7.- DELETING THE MAXIMUM AND MINIMUM VALUES"***) or through the communications options (***"6.3.5.- DELETING VALUES"***).

4.7.2.- TOTALISERS

For the **Positive Energy**, **Negative Energy, Positive Electric Charge** and **Negative Electric Charge** parameters, the value of Energy or Electric Charge since the device was started can be viewed by pressing the key ☰ while the corresponding parameter is being displayed.

The total value is displayed in 3 totalisers, **A**, **B** and **C**. When the key ☰ is first pressed, totaliser **A** is displayed and the letter **A** is shown at the top left of the display.
Press key ☰ to view the different totalisers.

Table 9: Display range of the Totalisers.

Totaliser	Display range
C	0... 9.999 k W/Ah
B	10 k W/Ah ... 99.99 M W/Ah
A	100 M W/Ah ... 999.9 G W/Ah

The totalisers can be cleared in the settings menu ("***5.6.8.- DELETING THE ELECTRIC CHARGE TOTALISERS***" and "***5.6.9.- DELETING THE ENERGY TOTALISERS***") or through the communications options (***"6.3.5.- DELETING VALUES"***).

5.- CONFIGURATION

Press and hold the ☰ key for more than 3 seconds to enter the configuration menu of the device. The configuration of the device is organized in different menus, **Figure 11**.

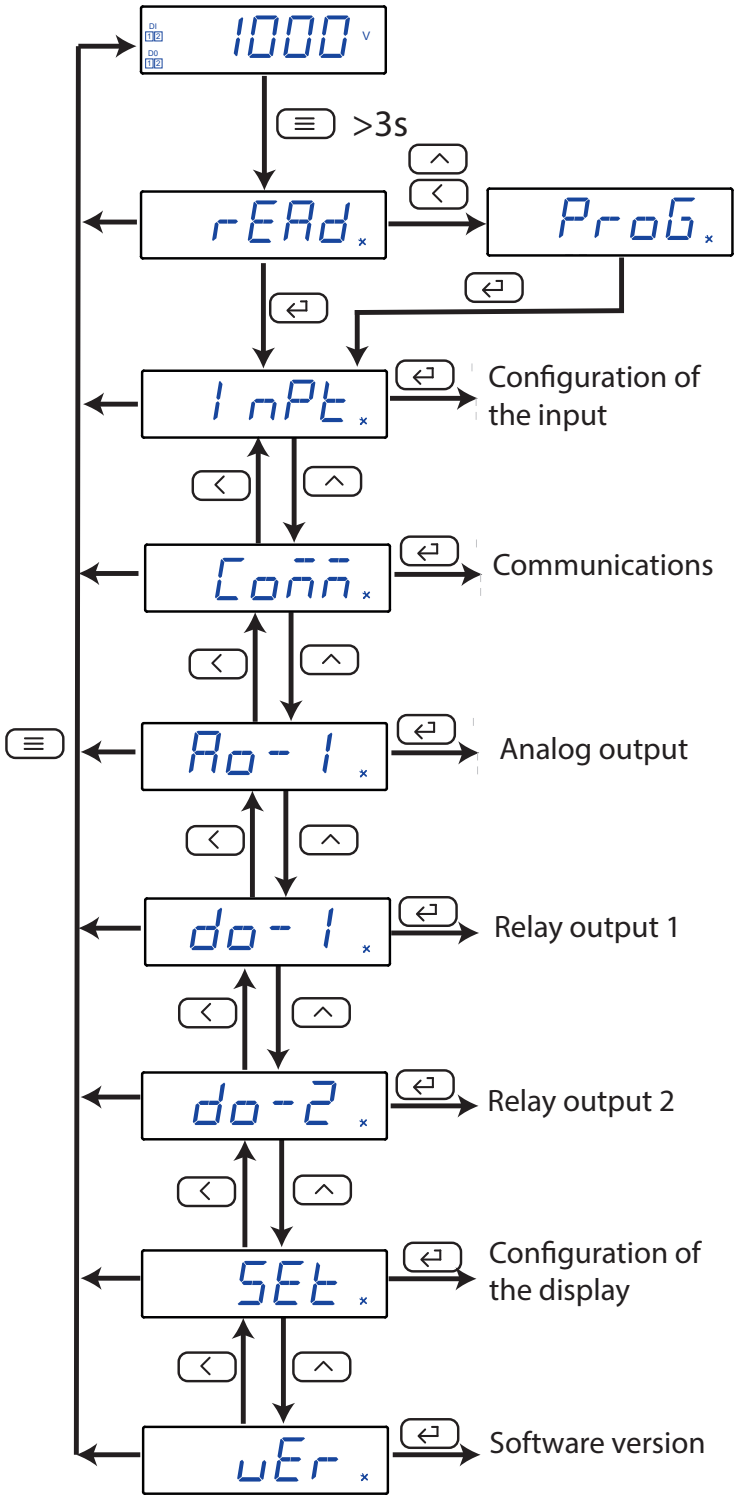

Figure 11: CVM-D41 DC configuration menu.

From any screen of the configuration menus, if no key is pressed for 4 minutes, the device leaves the configuration menu and returns to the display screen.

Note: *In **"ANNEX A.- CONFIGURATION MENU"** you can see the complete configuration menu.*

On the rEAd screen, press the ↵, key to access the configuration menu in the **display mode**, i.e., the configuration parameters cannot be modified.

On the rEAd screen, press the ‹ or ^ keys to access the configuration menu in the **programming mode**, i.e., the configuration parameters can be modified.

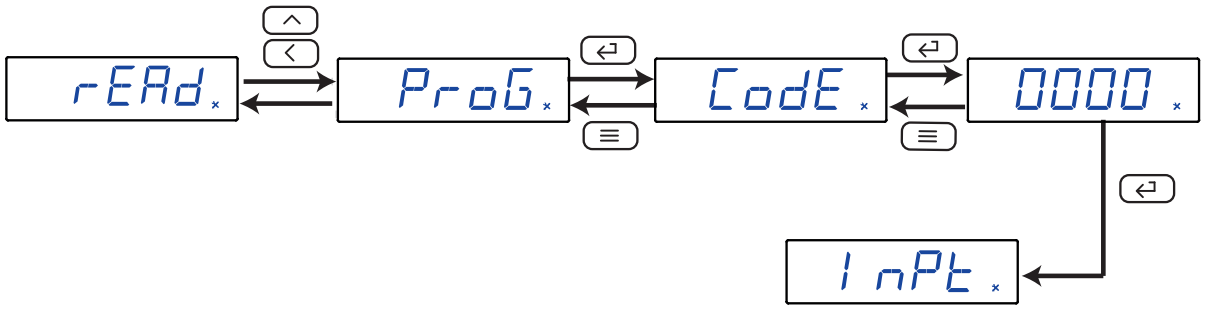

Figure 12: Access the configuration menu in the programming mode.

Before accessing the configuration menu, it is necessary to enter the login password.

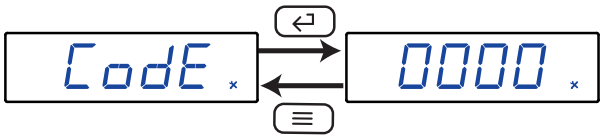

Figure 13: Login password.

Use the ^, key to modify the value of the flashing digit
When the desired value is shown on the screen, press the ‹ key to skip the digit.

Default password: 0001

Note: *The password can be modified, see* ***"5.6.1 .- LOGIN PASSWORD"*** **.**

To validate the data, press the ↵ key.

If the password entered is incorrect, the Err message will appear for a few seconds and the device will return to the password configuration screen, **Figure 13**.

5.1.- CONFIGURATION OF THE INPUT

Figure 14 shows the main screen of the input configuration menu, where the input measurement range and the display value are configured.



Figure 14: Input configuration menu, main screen.

Press the ↵ key to open the configuration menu.

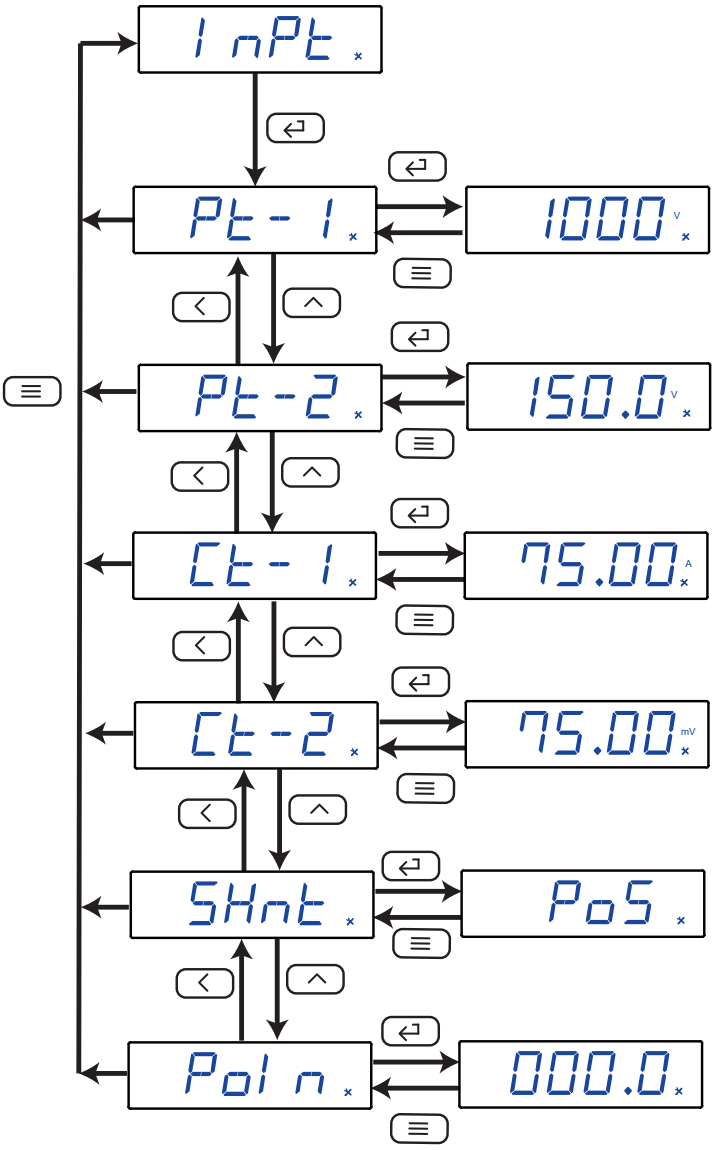

Figure 15: Input configuration menu.

5.1.1.- VOLTAGE DISPLAY VALUE

This screen is used to configure the voltage value to display when the maximum value of the voltage measurement range is input to the device.

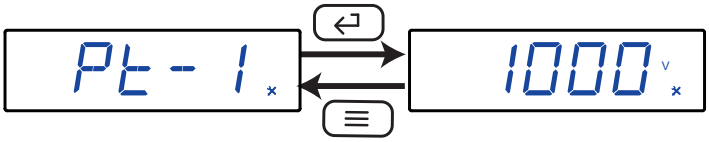

Use the ^, key to modify the value of the flashing digit
When the desired value is shown on the screen, press the < key to skip the digit.

When you reach the last digit and press the < key, you select the position of the decimal point. Use the ^ to modify the decimal point.

✓ **Configuration values**

Table 10: Configuration values: Voltage display value.

	Voltage display value
Minimum value	1.000 V
Maximum value	9999 V

To validate the data, press the ↵ key.
Use the < and ^ keys to browse the configuration screens of the menu.

5.1.2.- VOLTAGE MEASUREMENT RANGE

This screen displays the voltage measurement range of the input signal.

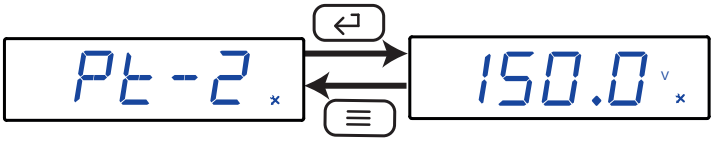

Use the < and ↵ keys at the same time to configure the value.
Use the ^,key to browse the different options.

✓ **Configuration values**

Table 11: Configuration values: Voltage measurement range.

	Voltage measurement range				
Possible values	*150.0* (150.0 V)	*300.0* (300.0 V)	*600.0* (600.0 V)	*1000* (1000 V)	*1500* (1500 V)

To validate the data, press the ↵ key.
Use the < and ^ keys to browse the configuration screens of the menu.

5.1.3.- CURRENT DISPLAY VALUE

This screen is used to configure the current value to display when the maximum value of the current is input to the device.

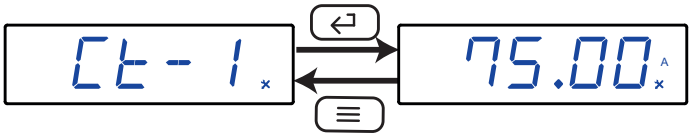

Use the ^, key to modify the value of the flashing digit
When the desired value is shown on the screen, press the < key to skip the digit.

When you reach the last digit and press the < key, you select the position of the decimal point.
Use the ^ to modify the decimal point.

✓ **Configuration values**

Table 12: Configuration values: Current display value.

	Current display value
Minimum value	1.000 A
Maximum value	9999 A

To validate the data, press the ↵ key.
Use the < and ^ keys to browse the configuration screens of the menu.

5.1.4.- CURRENT INPUT

The shunt for the input current is selected on this screen.

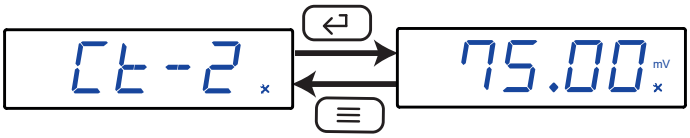

Use the < and ↵ keys at the same time to configure the value.
Use the ^ key to browse the different options.

✓ **Configuration values**

Table 13: Configuration values: Current input.

	Current input			
Possible values	50.00 (50.00 mV)	60.00 (60.00 mV)	75.00 (75.00 mV)	100.0 (100.0 mV)
	150.0 (150.0 mV)	200.0 (200.0 mV)	250.0 (250.0 mV)	300.0 (300.0 mV)
	400.0 (400.0 mV)	600.0 (600.0 mV)		

To validate the data, press the ↵ key.
Use the < and ^ keys to browse the configuration screens of the menu.

5.1.5.- SHUNT POSITION

On this screen, select where the shunt has been inserted to measure the current in the installation.

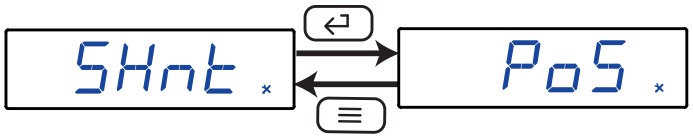

Use the key to browse the different options.

✓ **Configuration values**

Table 14: Configuration values: Shunt position.

	Shunt position
Possible values	PoS , Shunt on the positive pole of the installation
	nEG , Shunt on the negative pole of the installation

To validate the data, press the key.
Use the and keys to browse the configuration screens of the menu.

5.1.6.- DECIMAL POINT FOR DISPLAYING VOLTAGE

This screen is used to select the decimal point to display when viewing the voltage

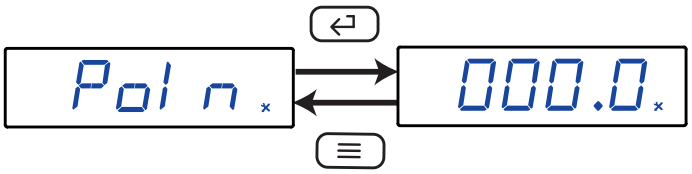

Use the key to browse the different options.

✓ **Configuration values**

Table 15: Configuration values: Decimal point for displaying voltage.

	Decimal point for displaying voltage
Possible values	0000 , no decimals.
	000.0 , display with 1 decimal point.
	00.00 , display with 2 decimal points.

To validate the data, press the key.
Use the and keys to browse the configuration screens of the menu.

5.1.7.- SAVE CONFIGURATION

To save the configuration of the device, press the key, until the main screen of the input configuration menu is opened, **Figure 14**.

Press the key again to show the validation screen.



Use the ^ key to browse the different options.

✓ **Configuration values**

Table 16: Configuration values: Save configuration.

	Save configuration
Possible values	no, exit the configuration without saving the changed values.
	YES, save the changed configuration values.

Press the ↵ key to validate the data and exit the configuration menu.

5.2.- RS-485 COMMUNICATIONS

Figure 16, shows the main screen of the communications menu, where the parameters of the RS-485 communications are configured.



Figure 16: RS-485 communications menu, main screen.

Press the ↵ key to open the configuration menu.

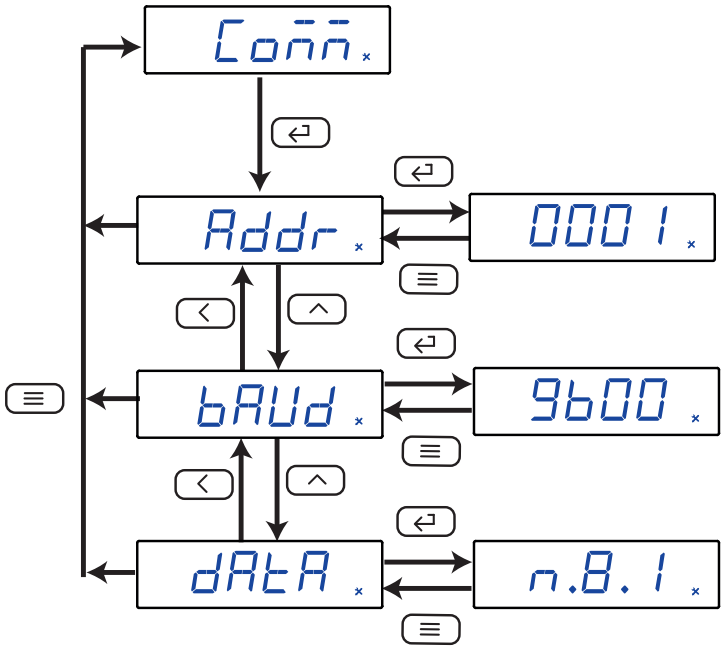

Figure 17:Communications menu.

5.2.1.- MODBUS ADDRESS

This screen is used to configure the modbus address of the device.

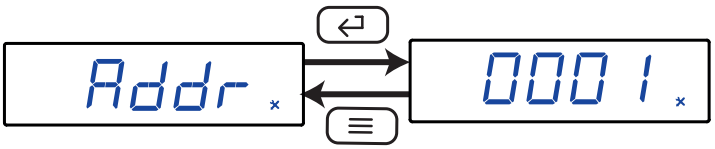

Use the ↑, key to modify the value of the flashing digit
When the desired value is shown on the screen, press the → key to skip the digit.

✓ **Configuration values**

Table 17: Configuration values: Modbus address.

	Modbus address
Minimum value	1
Maximum value	247

To validate the data, press the ↵ key.

Use the ← and ↑ keys to browse the configuration screens of the menu.

5.2.2.- BAUD RATE

In this screen, the baud rate of RS-485 communications is selected.

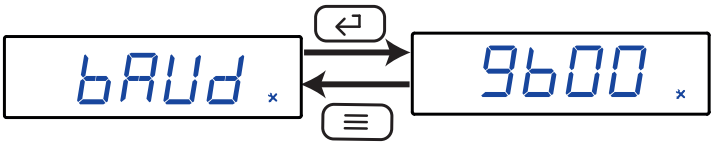

Use the ↑ key to browse the different options.

✓ **Configuration values**

Table 18: Configuration values: Baud rate.

	Baud rate		
Possible values	2400, 2400 bps.	4800, 4800 bps.	9600, 9600 bps.
	19.20, 19200 bps.	38.40, 38400 bps.	

To validate the data, press the ↵ key.

Use the ← and ↑ keys to browse the configuration screens of the menu.

5.2.3.- DATA FORMAT

This screen is used to configure the data format.

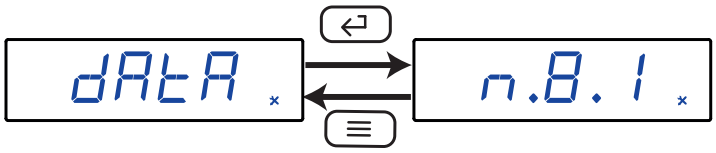

Use the key to browse the different options.

✓ **Configuration values**

Table 19: Configuration values: Data format.

	Data format
Possible values	n.8.1, no parity, 8 data bits, 1 stop bit
	o.8.1, odd parity, 8 data bits, 1 stop bit
	E.8.1, even parity, 8 data bits, 1 stop bit
	n.8.2, no parity, 8 data bits, 2 stop bit

To validate the data, press the key.

Use the and keys to browse the configuration screens of the menu.

5.2.4.- SAVE CONFIGURATION

To save the configuration of the device, follow the steps indicated in section ***"5.1.7.- SAVE CONFIGURATION"***.

5.3.- ANALOG OUTPUT

Figure 18, shows the main screen of the analog output menu.



Figure 18: Analog output menu, main screen.

Press the key to open the configuration menu.

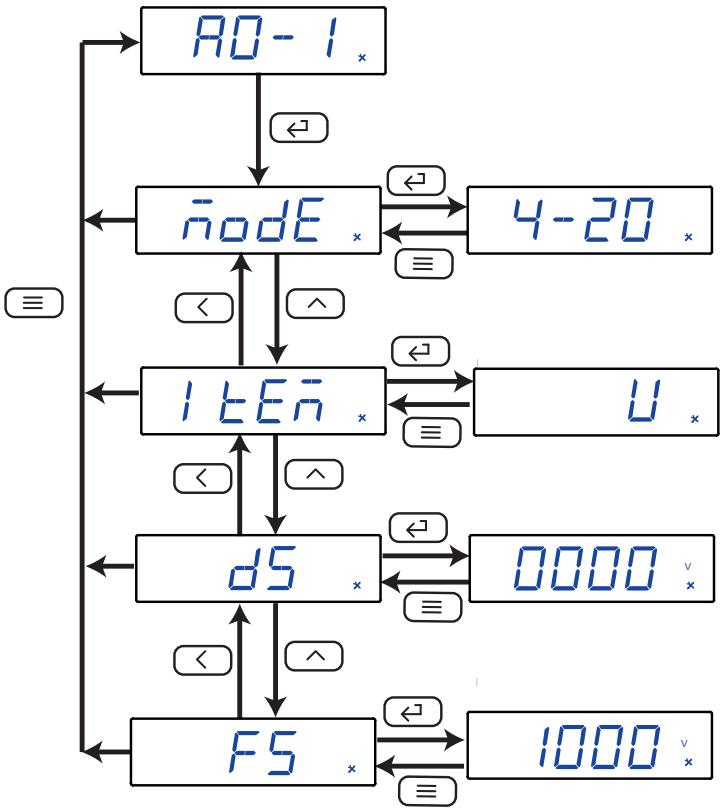

Figure 19: Analog output menu.

5.3.1.- TYPE OF OUTPUT

In this screen the output type of the analog output is configured

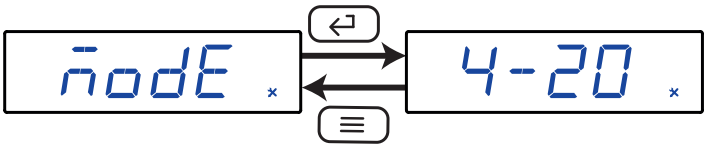

Use the ⟨ and ↵ keys at the same time to configure the value.
Use the ^ key to browse the different options.

✓ **Configuration values**

Table 20: Configuration values: Type of output.

	Type of output
Possible values	***Current Output Model***
	4-20, Current output 4 ... 20 mA
	0-20, Current output 0 ... 20 mA
	12.20, Current output 4 ...12 ... 20 mA
	Voltage Output Model
	0- 10, Voltage output 0 ... 10 V
	2- 10, Voltage output 2 ... 10 V

To validate the data, press the ↵ key.

Use the ⟨ and ^ keys to browse the configuration screens of the menu.

5.3.2.- ANALOG OUTPUT PARAMETER

This screen is used to configure the parameter that is acted upon by the analogue output.

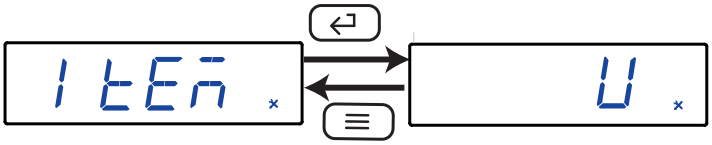

Use the key to browse the different options.

✓ **Configuration values**

Table 21: Configuration values: Analog output parameter.

	Analog output parameter
Possible values	*U*, Analog output of the voltage measurement.
	I , Analog output of the current measurement.
	P, Analog output of the power measurement.

To validate the data, press the key.

Use the and keys to browse the configuration screens of the menu.

5.3.3.- READING FOR THE START OF THE ANALOG OUTPUT

In this screen, the reading value from which the analog output is started is configured.

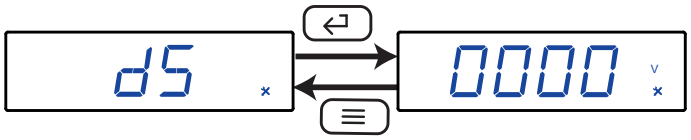

Use the , key to modify the value of the flashing digit
When the desired value is shown on the screen, press the key to skip the digit.

✓ **Configuration values**

Table 22: Configuration values: Reading for the start of the analog output.

	Reading for the start of the analog output
Minimum value	0000 V, For the analog output of the voltage measurement.
	00.00 A, For the analog output of the current measurement.
	00.00 kW, For the analog output of the power measurement.
Maximum value	0.5 x **A**

Note: *The value of the* **A** *variable varies depending on the* ***analog output parameter*** *programmed, see* ***Table 23****.*

Table 23: Value of the A variable.

Analog output parameter	A
V, voltage	PT-1
I, current	CT-1
P, power	PT-1 x CT-1(1)

(1)The 4 most significant digits.

Note: **FS** *(End of the analog output)* - **DS** *(Start of the analog output)* ≥ *500*

To validate the data, press the ↵ key.
Use the < and ^ keys to browse the configuration screens of the menu.

5.3.4.-READING FOR THE END OF THE ANALOG OUTPUT

In this screen, the reading value from which the analog output ends is configured.

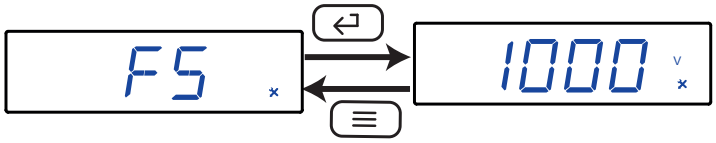

Use the ^, key to modify the value of the flashing digit
When the desired value is shown on the screen, press the < key to skip the digit.

✓ **Configuration values**

Table 24: Configuration values: Reading for the end of the analog output.

	Reading for the end of the analog output
Minimum value	> 0.5 x **A**
	1.2 x **A**, for the analog output of the voltage measurement,
	1.2 x **A**, for the analog output of the current measurement
Maximum value	**PT-1 x CT-1**, for the analog output of the power measurement.

Note: *The value of the* **A** *variable varies depending on the* ***analog output parameter*** *programmed, see* ***Table 23****.*
Note: **FS** *(End of the analog output)* - **DS** *(Start of the analog output)* ≥ *500*

To validate the data, press the ↵ key.
Use the < and ^ keys to browse the configuration screens of the menu.

5.3.5.- SAVE CONFIGURATION

To save the configuration of the device, follow the steps indicated in section ***"5.1.7.- SAVE CONFIGURATION"***.

5.4.- RELAY OUTPUT 1

Figure 20, shows the main screen of the configuration menu of relay output 1.



Figure 20: Configuration menu of relay output 1, main screen.

Press the ↵ key to open the setup menu.

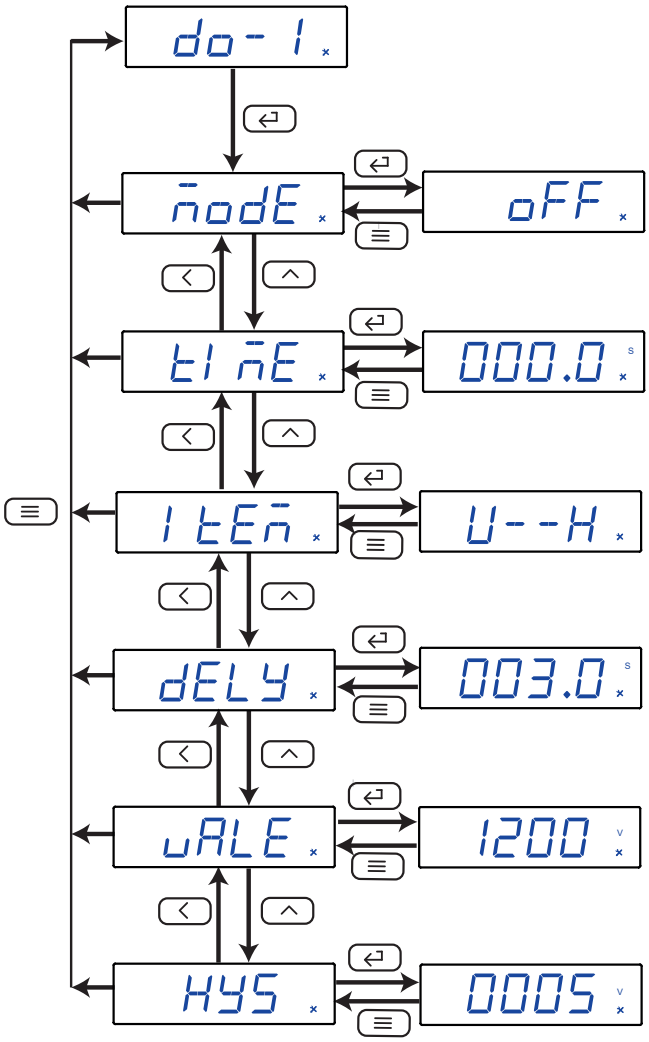

Figure 21:Configuration menu of relay output 1.

5.4.1.- RELAY MODE

This screen is used to configure the operating mode of relay 1.

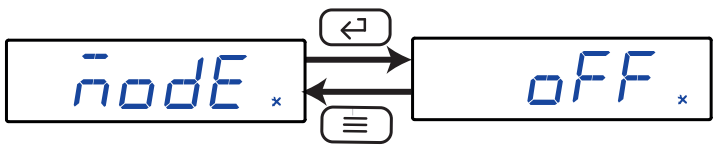

Use the ^ key to browse the different options.

✓ **Configuration values**

Table 25: Configuration values: Relay mode.

	Relay mode
Possible values	oFF, relay output 1 is disabled.
	rEn, remote control output.
	ALr, alarm output.

To validate the data, press the ↵ key.
Use the < and ^ keys to browse the configuration screens of the menu.

5.4.2.- RELAY PULSE DURATION

The alarm relay can behave in 2 different ways:

1.- The relay is activated when the alarm is triggered and is deactivated when the alarm is de-activated.

2.- The relay is activated when the alarm is triggered and is deactivated after a programmed period of time, even though the alarm condition has not been cancelled.

This screen is used to configure the programmed time, i.e., the relay pulse duration.
To make the relay operate in mode **no. 1**, program the value to **0**.

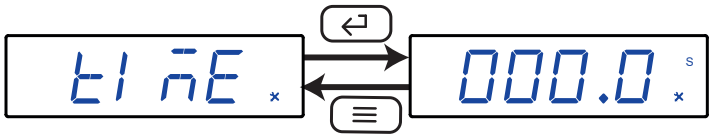

Use the ^, key to modify the value of the flashing digit
When the desired value is shown on the screen, press the < key to skip the digit.

✓ **Configuration values**

Table 26: Configuration values: Relay pulse duration.

	Relay pulse duration
Minimum value	000.0 s
Maximum value	999.9 s

To validate the data, press the ↵ key.
Use the < and ^ keys to browse the configuration screens of the menu.

5.4.3.- ALARM PARAMETER

This screen is used to configure the parameter that will be used to activate the alarm.

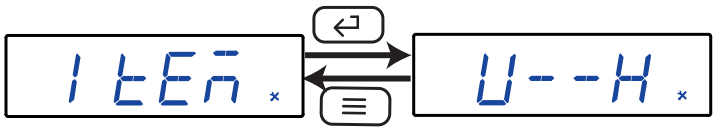

Use the ^ key to browse the different options.

✓ **Configuration values**

Table 27: Configuration values: Alarm parameter.

	Alarm parameter
Possible values	U--L, Active alarm when the voltage is less than the alarm value.
	I --L, Active alarm when the current is less than the alarm value.
	P--L, Active alarm when the power is less than the alarm value.
	dI 1L, Active alarm when digital input 1 is disconnected.
	dI 2L,Active alarm when digital input 2 is disconnected.
	U--H, Active alarm when the voltage is higher than the alarm value.
	I --H, Active alarm when the current is higher than the alarm value.
	P--H, Active alarm when the power is higher than the alarm value.
	dI 1H, Active alarm when digital input 1 is connected.
	dI 2H,Active alarm when digital input 2 is connected.

Note: *The alarm works in absolute values.*
Example: *When setting an alarm when the voltage is above 10 V, the alarm is activated at 11 V and -11 V.*

To validate the data, press the ↵ key.

Use the < and ^ keys to browse the configuration screens of the menu.

5.4.4.- CONNECTION DELAY

This screen is used to configure the alarm connection delay.

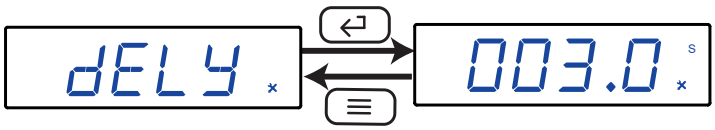

Use the ^, key to modify the value of the flashing digit
When the desired value is shown on the screen, press the < key to skip the digit.

✓ **Configuration values**

Table 28: Configuration values: Connection delay.

	Connection delay
Minimum value	000.0 s
Maximum value	999.9 s

To validate the data, press the ↵ key.

Use the < and ^ keys to browse the configuration screens of the menu.

5.4.5.- ALARM VALUE

The display value for voltage, current or power after which the alarm will be activated is configured on this screen. The value is programmed in absolute values.

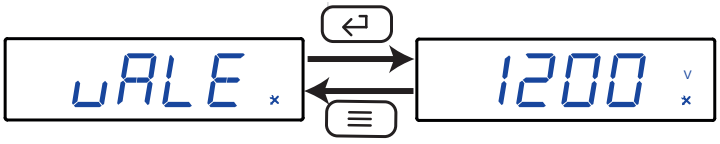

Use the , key to modify the value of the flashing digit
When the desired value is shown on the screen, press the key to skip the digit.

✓ **Configuration values**

Table 29: Configuration values: Alarm value.

	Alarm value
Minimum value	0
Maximum value	9999

To validate the data, press the key.
Use the and keys to browse the configuration screens of the menu.

5.4.6.- HYSTERESIS

This screen is used to configure the hysteresis value, i.e., the difference between the alarm connection and disconnection value.

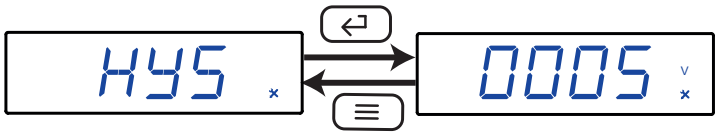

Use the , key to modify the value of the flashing digit
When the desired value is shown on the screen, press the key to skip the digit.

✓ **Configuration values**

Table 30: Configuration values: Hysteresis.

	Hysteresis
Minimum value	0
Maximum value	9999

To validate the data, press the key.
Use the and keys to browse the configuration screens of the menu.

5.4.7.- SAVE CONFIGURATION

To save the configuration of the device, follow the steps indicated in section ***"5.1.7.- SAVE CONFIGURATION"***.

5.5.- RELAY OUTPUT 2

Figure 22, shows the main screen of the configuration menu of relay output 2.



Figure 22:Configuration menu of relay output 2, main screen.

The configuration is the same as for alarm relay 1, see ***"5.4.- RELAY OUTPUT 1"***.

5.6.- CONFIGURATION OF THE DISPLAY

Figure 23, shows the main screen of the configuration menu of the display.



Figure 23: Configuration menu of the display, main screen.

Press the ↵ key to open the configuration menu.

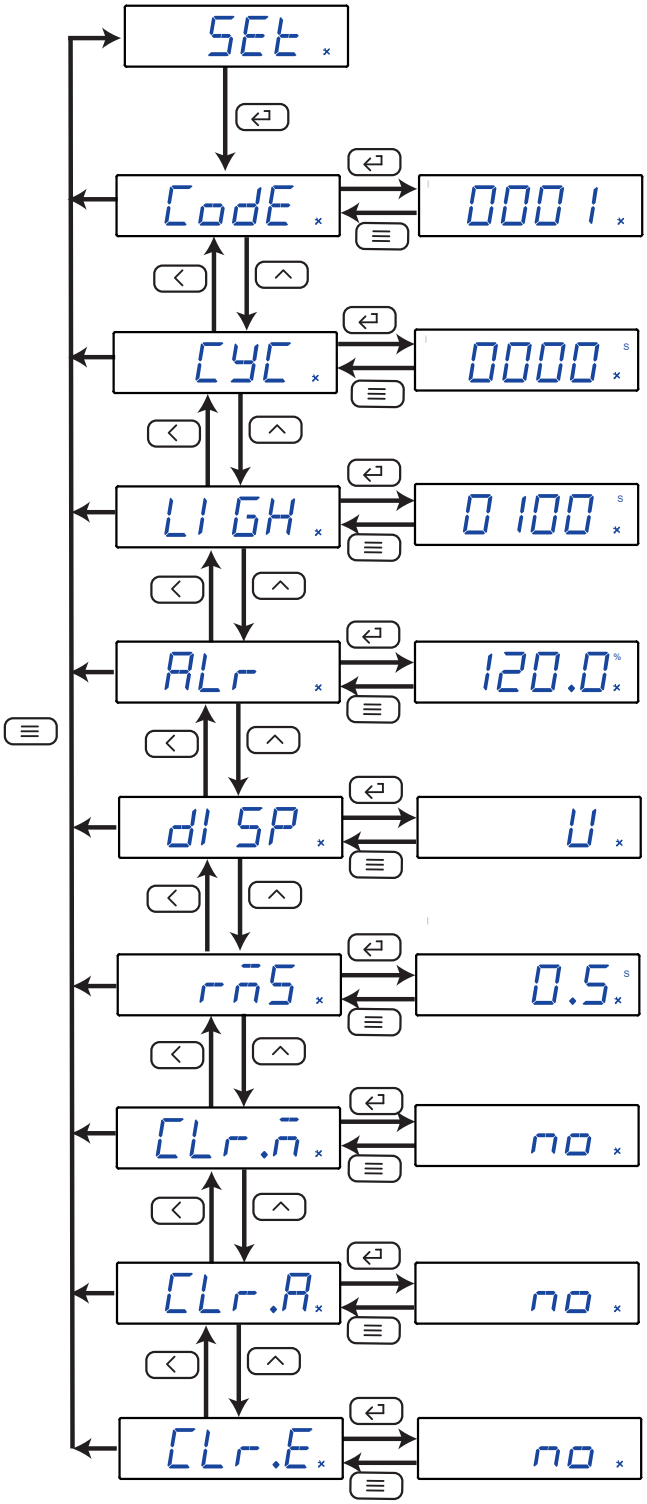

Figure 24:Configuration menu of the display.

5.6.1.- LOGIN PASSWORD

This screen is used to configure the value of the password used to access the configuration menu in the **programming mode**.

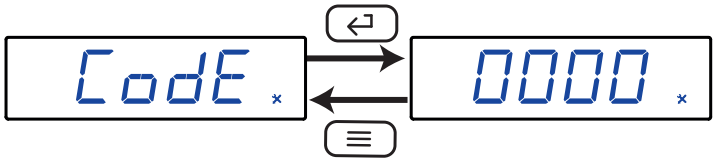

Use the , key to modify the value of the flashing digit

When the desired value is shown on the screen, press the key to skip the digit.

✓ **Configuration values**

Table 31:Configuration values: Login Password.

	Login password
Minimum value	0
Maximum value	9999

To validate the data, press the key.
Use the and keys to browse the configuration screens of the menu.

5.6.2.- CYCLIC DISPLAY

The display screens can change automatically depending on the time programmed in this section.

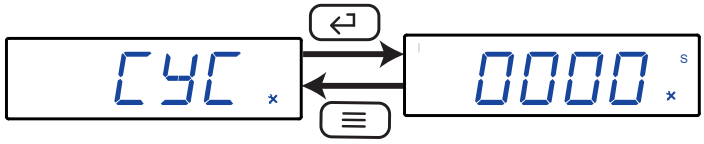

Use the , key to modify the value of the flashing digit
When the desired value is shown on the screen, press the key to skip the digit.

✓ **Configuration values**

Table 32: Configuration values: Cyclic display.

	Cyclic display
Minimum value	0 s.
Maximum value	60 s.

Note: *If set to* **0**, *the display screens do not cycle automatically.*

To validate the data, press the key.
Use the and keys to browse the configuration screens of the menu.

5.6.3.- BACKLIGHT OF THE DISPLAY

The time that the display backlight will stay lit in seconds if no key is pressed is programmed on this screen.

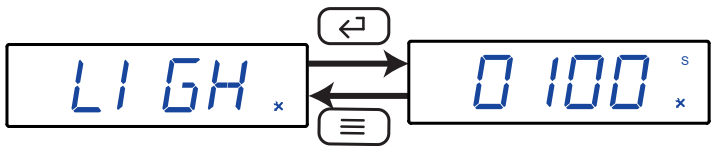

Use the , key to modify the value of the flashing digit
When the desired value is shown on the screen, press the key to skip the digit.

✓ Configuration values

Table 33: Configuration values: Backlight of the display.

	Backlight of the display
Minimum value	0 s.
Maximum value	9999 s.

Note: *If set to* **0**, *the display backlight does not turn off.*

To validate the data, press the ↵ key.
Use the ‹ and ^ keys to browse the configuration screens of the menu.

5.6.4.- LIGHT ALARM

If the voltage value measured by the device is higher than a % of the nominal value, the device can make the digits on the display start flashing, in the form of a light alarm.

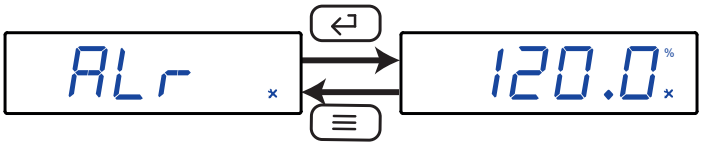

Use the ^, key to modify the value of the flashing digit
When the desired value is shown on the screen, press the ‹ key to skip the digit.

✓ Configuration values

Table 34: Configuration values: Light alarm

	Light alarm
Minimum value	30.0 %
Maximum value	120.0 %

Note: *If set to* **0**, *the light alarm is deactivated.*

To validate the data, press the ↵ key.
Use the ‹ and ^ keys to browse the configuration screens of the menu.

5.6.5.-DISPLAY HOME SCREEN

In this section the initial display screen is configured.

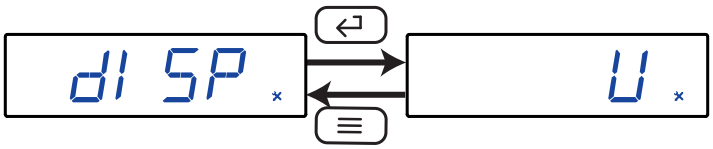

Use the ^ key to browse the different options.

✓ **Configuration values**

Table 35: Configuration values: Display home screen.

	Display home screen
Possible values	*U* ,voltage screen.
	I , current screen.
	P,power screen.
	EPP, positive energy screen.
	EPn, negative energy screen.
	AHP, positive Ah screen.
	AHn, negative Ah screen.

To validate the data, press the key.
Use the and keys to browse the configuration screens of the menu.

5.6.6.- REFRESH TIME

In this section the device refresh time is configured.

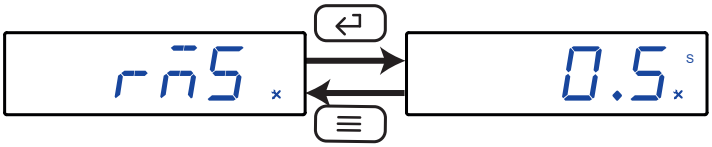

Use the key to browse the different options.

✓ **Configuration values**

Table 36: Configuration values: Refresh time.

	Refresh time
Possible values	*0.5*,refresh time of 0.5 s
	0.3, refresh time of 0.3 s.

To validate the data, press the key.
Use the and keys to browse the configuration screens of the menu.

5.6.7.- DELETING THE MAXIMUM & MINIMUM VALUES

This screen determines whether the maximum and minimum values are deleted or not.

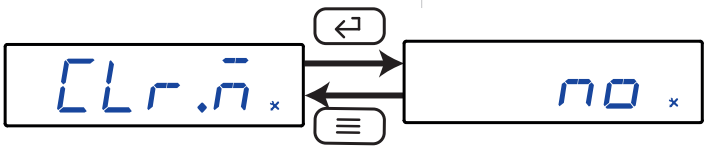

Use the key to browse the different options.

✓ Configuration values

Table 37: Configuration values: Deleting the maximum & minimum values.

	Deleting the maximum & minimum values
Possible values	no, the maximum and minimum values are not deleted.
	YES, the maximum and minimum values are deleted.

To validate the data, press the ↵ key.
Use the < and ^ keys to browse the configuration screens of the menu.

5.6.8.- DELETING THE ELECTRICAL CHARGE TOTALISERS

On this screen, the user selects whether or not to clear the electric charge totalisers.

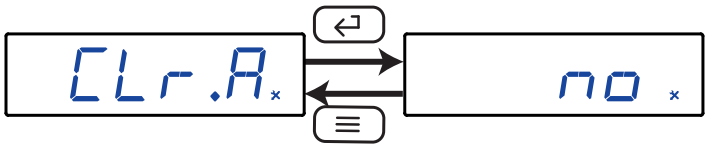

Use the ^ key to browse the different options.

✓ Configuration values

Table 38: Configuration values: Deleting the electrical charge totalisers.

	Deleting the electrical charge totalisers
Possible values	no, the totalisers are not cleared.
	YES, the totalisers are cleared.

To validate the data, press the ↵ key.
Use the < and ^ keys to browse the configuration screens of the menu.

5.6.9.- DELETING THE ENERGY TOTALISERS

On this screen, the user selects whether or not to clear the energy totalisers.

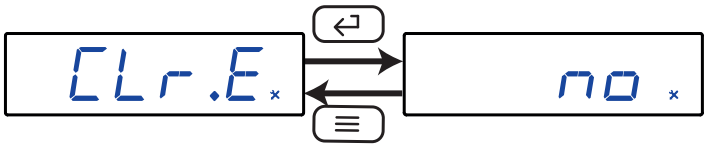

Use the ^ key to browse the different options.

✓ Configuration values

Table 39: Configuration values: Deleting the energy totalisers.

	Deleting the energy totalisers
Possible values	no, the totalisers are not cleared.
	YES, the totalisers are cleared.

To validate the data, press the key.
Use the and keys to browse the configuration screens of the menu.

5.6.10.- SAVE CONFIGURATION

To save the configuration of the device, follow the steps indicated in section ***"5.1.7.- SAVE CONFIGURATION"***.

5.7.- SOFTWARE VERSION

The software version of the device is shown in the **display mode**.

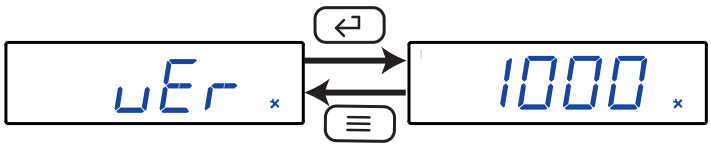

6.- RS-485 COMMUNICATIONS

The **CVM-D41 DC** devices have one **RS-485** communications port, with communications protocols: **MODBUS RTU ®**.

6.1.- CONNECTIONS

The **RS-485** cable must be wired with twisted pair cable with mesh shield, with a maximum distance between the **CVM-D41 DC** and the master device of 1200 metres.
A maximum of 32 **CVM-D41 DC** devices can be connected to this bus.

Use an intelligent **RS-232** to **RS-485** network protocol converter to establish the communications with the master device.

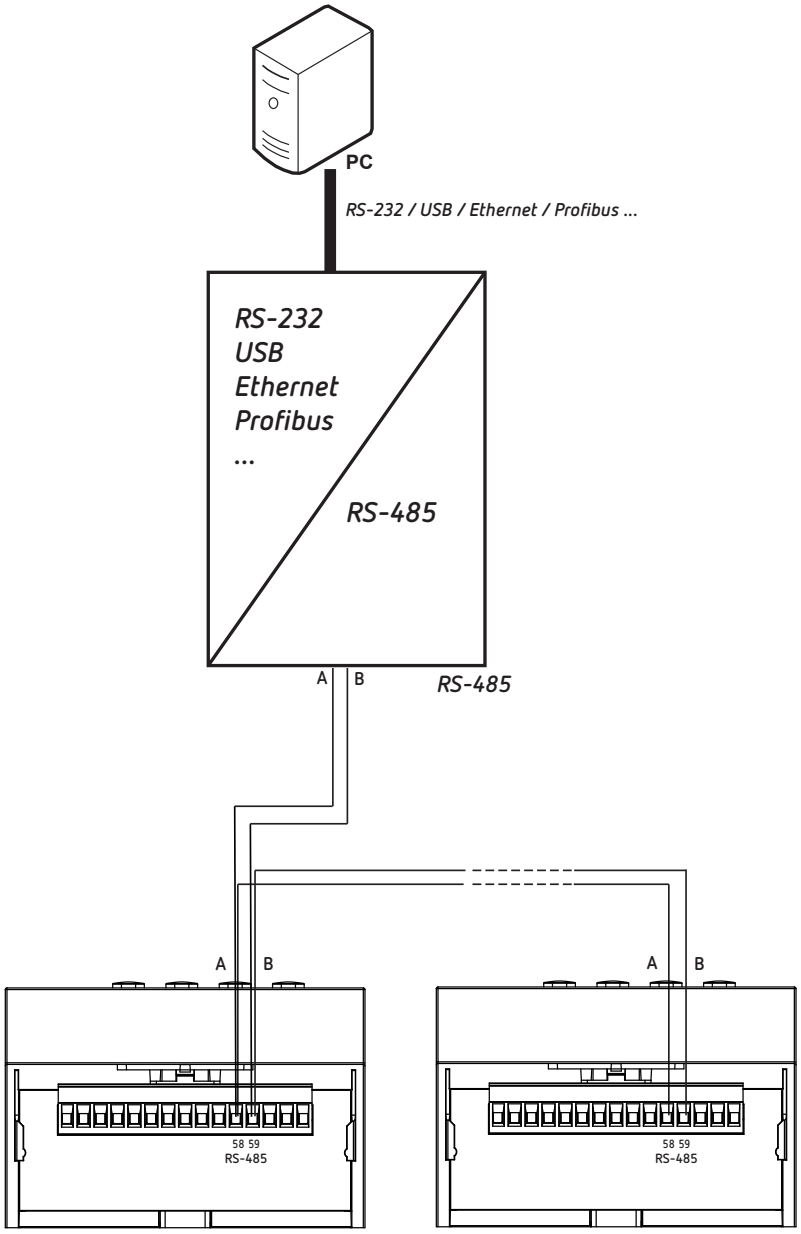

Figure 25: RS-485 Connection diagram.

Note: *Default values of the RS-485 communication:* ***19200 bps***, ***No parity***, ***8 data bits*** *and* ***1 stop bit.***

6.2.- MODBUS PROTOCOL

In the Modbus protocol, the **CVM-D41 DC** device uses the RTU (Remote Terminal Unit) mode.
The Modbus functions implemented in the device are as follows:

Function 0x01: Reading a relay.
Function 0x02: Reading input status.
Function 0x03 and **0x04**: Reading integer registers.
Function 0x05: Writing a relay.
Function 0x0F: Writing multiples relays
Function 0x10: Writing multiples registers.

6.2.1. READING EXAMPLE: FUNCTION 0x01.

Question: Status of output relays

Address	Function	Initial Register	No. of Registers	CRC
01	01	0000	0002	BDCB

Address: 01, Peripheral number: 1 in decimal.
Function: 01, Read function.
Initial Register: 0000, on which the reading will start.
No. of Registers: 0002, number of registers read.
CRC: BDCB, CRC Character.

Response:

Address	Function	No. of Bytes	Register No. 1	Register No. 2	CRC
01	01	01	0001	0000	6611

Address: 01, Responding peripheral number: 1 in decimal.
Function: 01, Read function.
No. of bytes: 01, No. of bytes received.
Registre No 1: 0001, output relays 1 closed.
Registre No 2: 0000, output relays 1 open.
CRC:6611, CRC.Character.

6.2.2. EXAMPLE OF OPERATION OF THE REMOTE CONTROL: FUNCTION 0x05.

Question: Activate the output of relay 1, programmed to work in remote control mode.

Address	Function	Initial Register	Relay action	CRC
01	05	0000	FF00	8C3A

Address: 01, Peripheral number: 1 in decimal.
Function: 05, Writing a relay
Initial Register: 0000, relay 1 address.
Relay action: FF00, We indicate that we want to close the relay.

CRC: 8C3A, CRC.Character.

Response:

Address	Function	Initial Register	Relay action	CRC
01	05	0000	FF00	8C3A

6.3.- MODBUS COMMANDS

All the addresses of Modbus memory are in Hexadecimal.

6.3.1.- MEASUREMENT VARIABLES AND DEVICE STATUS

For these variables is implemented the **Function 0x03** and **0x04**.

Table 40: Modbus memory map (Table 1)

Parameter	Format	Address	V. Maximum	V. Minimum	Units
Voltage	float	06	08	0A	V
Current	float	12	14	16	A
Power	float	18	1A	1C	kW
Positive electric charge	float	1E	-	-	Ah
Negative electric charge	float	20	-	-	Ah
Positive energy	float	22	-	-	kWh
Negative energy	float	24	-	-	kWh

Table 41: Modbus memory map (Table 2)

Parameter	Format	Address	Value
Communications ID	int	104	**ID 530 :** Analog output A **ID 540 :** Analog output V
Voltage	int	106	V or kV
Decimal point of voltage	int	107	**0:** xxxx - **1:** xxx.x - **2:** xx.xx - **3:** x.xxx
Voltage units	int	108	**0:** V - **1:** kV
Current	int	109	A or kA
Decimal point of current	int	10A	**0:** xxxx - **1:** xxx.x - **2:** xx.xx - **3:** x.xxx
Current units	int	10B	**0:** A - **1:** kA
Power	int	10C	W, kW, MW
Decimal point of power	int	10D	**0:** xxxx - **1:** xxx.x - **2:** xx.xx - **3:** x.xxx
Power units	int	10E	**0:** W - **1:** kW - **2:** MW
Positive electric charge	Long[2]	110... 113	Long [1]x2^{32} + Long[0] mAh
Negative electric charge	Long[2]	114... 117	Long [1]x2^{32} + Long[0] mAh
Positive energy	Long[2]	118... 11B	Long [1]x2^{32} + Long[0] Wh
Negative energy	Long[2]	11C ... 11F	Long [1]x2^{32} + Long[0] Wh

Table 42: Modbus memory map (Table 3)

Parameter	Format	Address
Device status	bit [16]	105

The format of the parameter **Device status** is shown in **Table 43:**

Table 43:Format of the parameter: Device status.

Bits	Description	Status
Bit 0	Device status	**0:** Device measuring **1:**Device in configuration mode
Bit 1		
Bit 2	Malfunction	**0:** Voltage **1:** Current **2:** Power **3:** Positive energy **4:** Negative energy **5:** Positive electric charge **6:** Negative electric charge
Bit 3	Light alarm	
Bit 4	Relay output	
Bit 8 - 15	Initial display screen	

Table 44: Modbus memory map (Table 4)

Parameter	Format	Address
Status of relay outputs	bit [16]	100
Status of digital inputs	bit [16]	102

The format of the parameters **Status of relay outputs and digital inputs** is shown in **Table 45:**

Table 45:Format of the parameter: Status of relay outputs and digital inputs.

Bit 15 ... 2	Bit 1	Bit 0
0	**Relay 2 / Digital input 2** **1:** Closed **0:** Open	**Relay 1/ Digital input 1** **1:** Closed **0:** Open

6.3.2.- RELAY OUTPUTS

For these variables is implemented the **Function 0x01.**

Table 46: Modbus memory map (Table 5)

Parameter	Address	Register
Relay outputs	0000	2

The format of the parameter is shown in **Table 47**

Table 47:Format of the parameter: Relay outputs.

Register 1	Register 2
Relay 1 **0001:** Closed **0000:** Open	**Relay 2** **0001:** Closed **0000:** Open

6.3.3.- DIGITAL INPUTS

For these variables is implemented the **Function 0x02.**

Table 48: Modbus memory map (Table 6)

Parameter	Address	Register
Digital inputs	0000	2

The format of the parameter is shown in **Table 49:**

Table 49:Format of the parameter: Digital inputs.

Register 1	Register 2
Digital input 1 **0001:** Closed **0000:** Open	**Digital input 2** **0001:** Closed **0000:** Open

6.3.4.- REMOTE CONTROL OUTPUT (Relay output)

For these variables is implemented the **Function 0x05.**

Table 50: Modbus memory map (Table 7)

Parameter	Format	Address	Value
Remote control, Output relay 1	bit	0000	**0:** Open **1:** Closed
Remote control, Output relay 2	bit	0001	**0:** Open **1:** Closed

Función 0x0F, multiple relay control:

Table 51: Modbus memory map (Table 8)

Parameter	Address	Register
Remote control	0000	2

The format of the parameter is shown in **Table 52**

Table 52:Format of the parameter: Remote control.

Register 1	Register 2
Relay 1 **0001:** Closed **0000:** Open	**Relay 2** **0001:** Closed **0000:** Open

6.3.5.- DELETING VALUES

The **Function 0x0E** is available to delete the maximum, minimum and totaliser values.

Address	Function	Initial relay address	Password	ID reset	ID value	CRC
Peripheral No.	0E	AACC	**1111**	**ID reset**	FF	xxxx

The **ID reset** value determines which values will be deleted:

Table 53: ID reset.

Parameter	ID reset
Maximum and minimum values	0x03
Electric charge totalisers	0x02
Energy totalisers	0x01

Example: *Clearing the energy totalisers:*

Address	Function	Initial relay address	Password	ID reset	ID value	CRC
01	0E	AACC	1111	01	FF	760D

6.3.6.- DEVICE CONFIGURATION VARIABLES

For these variables is implemented the **Function 0x10.**

6.3.6.1. Configuration of the input

Table 54: Modbus memory map: Configuration of the input.

Configuration of the input			
Parameter	Format	Address	Valid data margin
Voltage display value	int	807	1000... 9999 V
Decimal point of the voltage	int	808	**0:** xxxx - **1:** xxx.x - **2:** xx.xx - **3:** x.xxx
Voltage measurement range	int	80B	**0:** 150.0 V - **1:** 300.0 V - **2:** 600.0 V **3:** 1000 V - **4:** 1500 V
Current display value	int	809	1000... 9999 A
Decimal point of the current display value	int	80A	**0:** xxxx - **1:** xxx.x - **2:** xx.xx - **3:** x.xxx
Current input	int	80C	**0:** 50.00 mV - **1:** 60.00 mV - **2:** 75.00 mV **3:** 100.0 mV - **4:** 150.0 mV - **5:** 200.0 mV **6:** 250.0 mV - **7:** 300.0 mV - **8:** 400.0 mV **9:** 600.0 mV
Decimal point for displaying voltage	int	82C	**0:** xxxx - **1:** xxx.x - **2:** xx.xx
Shunt position	int	82E	**0:**Negative - **1:** Positive

6.3.6.2. RS-485 communications

Table 55:Modbus memory map: RS-485 communications.

RS-485 communications			
Parameter	Format	Address	Valid data margin
Modbus address	int	802	1... 247
Baud rate	int	803	**0:** 2400 bps - **1:** 4800 bps - **2:** 9600 bps - **3:** 19200 bps- **4:** 38400 bps
Data format	int	804	**0:** n,8,1 : no parity, 8 data bits, 1 stop bit **1:** o,8,1 : odd parity, 8 data bits, 1 stop bit **2:** e,8,1 : even parity, 8 data bits, 1 stop bit **3:** n,8,2 : no parity, 8 data bits, 2 stop bit

6.3.6.3. Analog output

Table 56:Modbus memory map: Analog output

Analog output			
Parameter	**Format**	**Address**	**Valid data margin**
Type of output	int	817	**Current output model:** **0:** 4 ... 20 mA - **1:** 0 ... 20 mA - **2:** 4 ... 12 ... 20 mA **Voltage output model:** **7:** 0 ... 10 V - **8:** 2 ... 10 V
Analog output parameter	int	814	**0:** Voltage **3:** Current **6:** Power
Reading for the end of the analog output (**fs**)	int	815	0.5 x **A**[2] < **fs** ≤ 1.2 x **A**[3]
Reading for the start of the analog output (**ds**)	int	816	0 [4] ≤ **ds** ≤ 0.5 x **A**[2]

[2] **A**: *The value of the* **A** *variable varies depending on the* ***analog output parameter*** *programmed, see* ***Table 23****.*
[3] *PT-1 x CT-1 for power measurement. 1.2 x A for voltage and current measurement.*
[4] *0000 V for the analog output of the voltage measurement, 00.00 A for the current measurement and 00.00 kW for the power measurement.*

6.3.6.4. Relay outputs

Table 57:Modbus memory map: Relay outputs

Relay outputs			
Parameter	**Format**	**Address**	**Valid data margin**
Relay 1: mode	int	820	**2:** Ouput disabled **1:** Alarm output **0:** Remote control output
Relay 2: mode	int	826	
Relay 1: pulse duration	int	821	000.0 ... 999.9 s
Relay 2: pulse duration	int	827	
Relay 1: Alarm parameter	int	822	**0:** High voltage alarm (U--H) **3:** High current alarm (I --H) **8:** High power alarm (P--H) **12:** Alarm when digital input 1 is connected (dI 1H) **13:** Alarm when digital input 2 is connected (dI 2H) **16:** Low voltage alarm (U--L) **19:** Low current alarm (I --L) **24:** Low power alarm (P--L) **28:** Alarm when digital input 1 is disconnected dI 1L) **29:** Alarm when digital input 2 is disconnected (dI 2L)
Relay 2: Alarm parameter	int	828	
Relay 1: connection delay	int	823	000.0 ... 999.9 s
Relay 2: connection delay	int	829	
Relay 1: alarm value	int	824	0000 ... 9999
Relay 2: alarm value	int	82A	
Relay 1: hysteresis	int	825	
Relay 2: hysteresis	int	82B	

6.3.6.5. Configuration of the display

Table 58:Modbus memory map: Configuration of the display

Configuration of the display			
Parameter	Format	Address	Valid data margin
Login password	int	800	0000... 9999
Cyclic display	int	80D	0... 60 s [5]
Backlight	int	801	0... 9999 s [6]
Light alarm	int	805	300... 1200 (x 0.1%) [7]
Display home screen	int	806	**0:** Voltage - **1:** Current - **2:** Power, **3:** Positive energy - **4:** Negative energy, **5:** Positive electric charge, **6:** Negative electric charge
Refresh time	int	82D	**0:** 0.5 s - **1:** 0.3 s.

[5] If set to **0**, the display screens do not cycle automatically.

[6] If set to **0**, the display backlight does not turn off.

[7] If set to **0**, the light alarm is deactivated.

7.- TECHNICAL FEATURES

AC Power supply [8]	
Rated voltage	100... 270 V ~
Frequency	50 / 60 Hz
Consumption	6... 18 VA
Installation category	CAT III 300V

DC Power supply [8]		
Rated voltage	100... 270 V ⎓	20... 60 V ⎓
Consumption	1,3... 2.0 W	2,5... 4.5 W
Installation category	CAT III 300V	

[8] Depending on model, see **Table 3.**

Voltage measurement circuit		
Rated voltage (Un)	± 150 V / ± 300 V / ± 600 V / ± 1000 V / ± 1500 V ⎓	
Overvoltage	1.2 Un continuous (Maximum: 1500 V ⎓ [9])	
Consumption	< 1 VA	
Impedance	> 1 MΩ	
Installation category	CAT III 1500V	
Scale	**Min voltage measured**	**Max voltage measured**
150.0 V ⎓	0.3 V ⎓	180 V ⎓
300.0 V ⎓	0.6 V ⎓	360 V ⎓
600.0 V ⎓	1.2 V ⎓	720 V ⎓
1000 V ⎓	2 V ⎓	1200 V ⎓
1500 V ⎓	3 V ⎓	1800 V ⎓ [9]

[9] Maximum: 1600 V ⎓ for 60 seconds.

Current measurement circuit	
Rated current (In)	Shunt: 50 mV / 60 mV / 75 mV / 100 mV / 150 mV / 200 mV / 250 mV / 300 mV / 400 mV / 600 mV
Overcurrent	1.2 In continuous (Maximum: 1500 V)
Consumption	< 1 VA
Impedance	< 20 mΩ
Installation category	CAT III 1500V

Measurement accuracy	
Voltage measurement	Clase 0.5
Current measurement	Clase 0.5
Power measurement	Class 1
Energy measurement	Class 1
Resolution	1 s

Relay outputs	
Quantity	2
Contact capacity (resistive)	**AC:** 2.5 A / 250 V~ , **CC:** 2.5 A / 30 V ⎓
Maximum current	2.5 A
Maximum switching power	625 VA
Electrical life (250 V~ / 5A)	$1x10^5$
Mechanical life	$5x10^6$

Digital inputs	
Quantity	2
Type	Potential free contact
Insulation	4000 V~
Maximum short-circuit current	3.3 mA ⎓
Maximum voltage in open circuit	17 V ⎓

Analog output	
Quantity	1
Maximum internal voltage	17 V ⎓
Linearity	0,5%
Nominal output range (10)	**Current output model:** 0-20 mA, 4-20 mA, 4-12-20 mA (programmable) **Voltage output model:** 0-10 V, 2-10 V (programmable)
Maximum load resistor	350 Ω

(10) Depending on model, see **Table 7**.

RS-485 communications	
Communications protocol	Modbus RTU
Baud rate	2400 - 4800 - 9600 - 19200 bps
Data bits	8
Stop bits	1 - 2
Parity	without, even, odd

User interface	
Display	LED 5 digits
Keyboard	4 keys
LEDs	2 LED

Environmental features	
Operating temperature	-25°C ... +70°C
Storage temperature	-25°C ... +70 °C
Relative humidity (no condensation)	≤ 93%
Maximum altitude	2000 m
Protection degree IP	Front: IP54, Rear case: IP20
Protection degree IK	IK08
Pollution degree	2
Use	Indoor
Isolation	Power supply - Output : ≥ 2kV ~ Input - Output : ≥ 1kV ~

Mechanical features			
Terminals	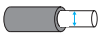		
1, 2, 4, 5, 11, 15, 16, 28, 29, 31, 32, 58, 59, 70, 71, 72	≤ 2.5 mm^2	0.5 ... 0.6 Nm	PZ0
Dimensions	**Figure 26 (mm)**		
Weight	284 g.		
Surround	pc + abs		

Standards	
Electromagnetic compatibility (EMC) -- Part 4-2: Testing and measurement techniques - Electrostatic discharge immunity test.	IEC 61000-4-2
Electromagnetic compatibility (EMC)- Part 4-3: Testing and measurement techniques - Radiated, radio-frequency, electromagnetic field immunity test	IEC 61000-4-3
Electromagnetic compatibility (EMC) - Part 4-4: Testing and measurement techniques - Electrical fast transient/burst immunity test	IEC 61000-4-4
Electromagnetic compatibility (EMC) - Part 4-5: Testing and measurement techniques - Surge immunity test	IEC 61000-4-5
Electromagnetic compatibility (EMC) - Part 4-6: Testing and measurement techniques - Immunity to conducted disturbances, induced by radio-frequency fields	IEC 61000-4-6
Electromagnetic compatibility (EMC) -- Part 4-8: Testing and measurement techniques - Power frequency magnetic field immunity test	IEC 61000-4-8
Electromagnetic compatibility (EMC) - Part 4-11: Testing and measurement techniques - Voltage dips, short interruptions and voltage variations immunity tests	IEC 61000-4-11
Safety requirements for electrical equipment for measurement, control and laboratory use -- Part 1: General requirements	IEC 61010-1
Electrical equipment for measurement, control and laboratory use - EMC requirements - Part 1: General requirements	IEC 61326-1
Safety requirements for electrical equipment for measurement, control and laboratory use -- Part 2-030: Particular requirements for testing and measuring circuits	IEC 61010-2-030

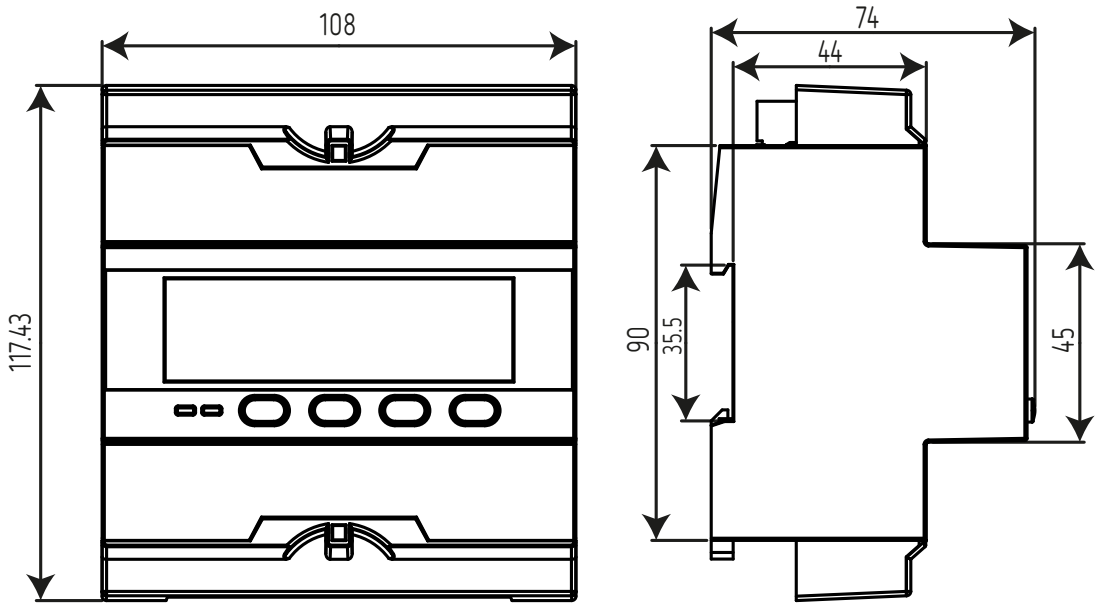

Figure 26: Dimensions of the CVM-D41 DC.

8.- MAINTENANCE AND TECHNICAL SERVICE

In the case of any query in relation to device operation or malfunction, please contact the **CIRCUTOR S.A.U.** Technical Support Service.

Technical Assistance Service
Vial Sant Jordi, s/n, 08232 - Viladecavalls (Barcelona)
Tel: 902 449 459 (Spain) / +34 937 452 919 (outside of Spain)
email: sat@circutor.com

9.- GUARANTEE

CIRCUTOR guarantees its products against any manufacturing defect for two years after the delivery of the units.

CIRCUTOR will repair or replace any defective factory product returned during the guarantee period.



- No returns will be accepted and no unit will be repaired or replaced if it is not accompanied by a report indicating the defect detected or the reason for the return.
- The guarantee will be void if the units has been improperly used or the storage, installation and maintenance instructions listed in this manual have not been followed. "Improper usage" is defined as any operating or storage condition contrary to the national electrical code or that surpasses the limits indicated in the technical and environmental features of this manual.
- **CIRCUTOR** accepts no liability due to the possible damage to the unit or other parts of the installation, nor will it cover any possible sanctions derived from a possible failure, improper installation or "improper usage" of the unit. Consequently, this guarantee does not apply to failures occurring in the following cases:
  - Overvoltages and/or electrical disturbances in the supply;
  - Water, if the product does not have the appropriate IP classification;
  - Poor ventilation and/or excessive temperatures;
  - Improper installation and/or lack of maintenance;
  - Buyer repairs or modifications without the manufacturer's authorisation.

CIRCUTOR, S.A. – Vial Sant Jordi, s/n
08232 Viladecavalls (Barcelona) Spain
(+34) 937 452 900 – info@circutor.com

(ES) DECLARACIÓN UE DE CONFORMIDAD

La presente declaración de conformidad se expide bajo la exclusiva responsabilidad de CIRCUTOR con dirección en **Vial Sant Jordi, s/n – 08232 Viladecavalls (Barcelona) España**

Producto:

Analizadores de redes

Serie:

CVM-D41 DC mA, CVM-D41 DC V

Marca:

CIRCUTOR

EL objeto de la declaración es conforme con la legislación de armonización pertinente en la UE, siempre que sea instalado, mantenido y usado en la aplicación para la que ha sido fabricado, de acuerdo con las normas de instalación aplicables y las instrucciones del fabricante

2014/35/EU: Low Voltage Directive	2014/30/EU: EMC Directive
2011/65/EU: RoHS2 Directive	2015/863/EU: RoHS3 Directive

Está en conformidad con la(s) siguiente(s) norma(s) u otro(s) documento(s) normativos(s):

IEC 61010-1:2010+AMD1:2016 Ed 3.0	IEC 61010-2-030:2017 Ed 2.0
IEC 61326-1:2020 Ed 3.0	IEC 63000:2016 Ed 1.0

Año de marcado "CE":

2022

(EN) EU DECLARATION OF CONFORMITY

This declaration of conformity is issued under the sole responsibility of CIRCUTOR with registered address at Vial Sant Jordi, s/n – 08232 Viladecavalls (Barcelona) Spain

Product:

Power analyzer

Series:

CVM-D41 DC mA, CVM-D41 DC V

Brand:

CIRCUTOR

The object of the declaration is in conformity with the relevant EU harmonisation legislation, provided that it is installed, maintained and used for the application for which it was manufactured, in accordance with the applicable installation standards and the manufacturer's instructions

2014/35/EU: Low Voltage Directive	2014/30/EU: EMC Directive
2011/65/EU: RoHS2 Directive	2015/863/EU: RoHS3 Directive

It is in conformity with the following standard(s) or other regulatory document(s):

IEC 61010-1:2010+AMD1:2016 Ed 3.0	IEC 61010-2-030:2017 Ed 2.0
IEC 61326-1:2020 Ed 3.0	IEC 63000:2016 Ed 1.0

Year of CE mark:

2022

(FR) DÉCLARATION UE DE CONFORMITÉ

La présente déclaration de conformité est délivrée sous la responsabilité exclusive de CIRCUTOR dont l'adresse postale est **Vial Sant Jordi, s/n – 08232 Viladecavalls (Barcelone) Espagne**

Produit:

analyseurs de réseaux triphasés

Série:

CVM-D41 DC mA, CVM-D41 DC V

Marque:

CIRCUTOR

L'objet de la déclaration est conforme à la législation d'harmonisation pertinente dans l'UE, à condition d'avoir été installé, entretenu et utilisé dans l'application pour laquelle il a été fabriqué, conformément aux normes d'installation applicables et aux instructions du fabricant

2014/35/EU: Low Voltage Directive	2014/30/EU: EMC Directive
2011/65/EU: RoHS2 Directive	2015/863/EU: RoHS3 Directive

Il est en conformité avec la(les) suivante (s) norme(s) ou autre(s) document(s) réglementaire (s):

IEC 61010-1:2010+AMD1:2016 Ed 3.0	IEC 61010-2-030:2017 Ed 2.0
IEC 61326-1:2020 Ed 3.0	IEC 63000:2016 Ed 1.0

Année de marquage « CE »:

2022

Viladecavalls (Spain), 3/10/2022
Chief Executive Officer: Joan Comellas Cabeza

Circutor
NIF A-08513178
Vial Sant Jordi s/n.
08232 Viladecavalls
Barcelona (Spain)
t. +34 93 745 29 00

CIRCUTOR, S.A.U. – Vial Sant Jordi, s/n
08232 Viladecavalls (Barcelona) Spain
(+34) 937 452 900 – info@circutor.com

(DE) KONFORMITÄTSERKLÄRUNG UE

Vorliegende Konformitätserklärung wird unter alleiniger Verantwortung von CIRCUTOR mit der Anschrift, Vial Sant Jordi, s/n – 08232 Viladecavalls (Barcelona) Spanien, ausgestellt

Produkt:

Dreiphasen-Leistungsanalyser

Serie:

CVM-D41 DC mA, CVM-D41 DC V

Marke:

CIRCUTOR

Der Gegenstand der Konformitätserklärung ist konform mit der geltenden Gesetzgebung zur Harmonisierung der EU, sofern die Installation, Wartung undVerwendung der Anwendung seinem Verwendungszweck entsprechend gemäß den geltenden Installationsstandards und der Vorgaben des Herstellers erfolgt.

2014/35/EU: Low Voltage Directive	2014/30/EU: EMC Directive
2011/65/EU: RoHS2 Directive	2015/863/EU: RoHS3 Directive

Es besteht Konformität mit der/den folgender/folgenden Norm/Normen oder sonstigem/sonstiger Regelwerk/Regelwerken

IEC 61010-1:2010+AMD1:2016 Ed 3.0	IEC 61010-2-030:2017 Ed 2.0
IEC 61326-1:2020 Ed 3.0	IEC 63000:2016 Ed 1.0

Jahr der CE-Kennzeichnung:

2022

(PT) DECLARAÇÃO DA UE DE CONFORMIDADE

A presente declaração de conformidade é expedida sob a exclusiva responsabilidade da CIRCUTOR com morada em
Vial Sant Jordi, s/n – 08232 Viladecavalls (Barcelona) Espanha

Producto:

Analisadores de redes

Série:

CVM-D41 DC mA, CVM-D41 DC V

Marca:

CIRCUTOR

O objeto da declaração está conforme a legislação de harmonização pertinente na UE, sempre que seja instalado, mantido e utilizado na aplicação para a qual foi fabricado, de acordo com as normas de instalação aplicáveis e as instruções do fabricante.

2014/35/EU: Low Voltage Directive	2014/30/EU: EMC Directive
2011/65/EU: RoHS2 Directive	2015/863/EU: RoHS3 Directive

Está em conformidade com a(s) seguinte(s) norma(s) ou outro(s) documento(s) normativo(s):

IEC 61010-1:2010+AMD1:2016 Ed 3.0	IEC 61010-2-030:2017 Ed 2.0
IEC 61326-1:2020 Ed 3.0	IEC 63000:2016 Ed 1.0

Ano de marcação "CE":

2022

(IT) DICHIARAZIONE DI CONFORMITÀ UE

La presente dichiarazione di conformità viene rilasciata sotto la responsabilità esclusiva di CIRCUTOR, con sede in
Vial Sant Jordi, s/n – 08232 Viladecavalls (Barcellona) Spagna

prodotto:

Analizzatori di reti

Serie:

CVM-D41 DC mA, CVM-D41 DC V

MARCHIO:

CIRCUTOR

L'oggetto della dichiarazione è conforme alla pertinente normativa di armonizzazione dell'Unione Europea, a condizione che venga installato, mantenuto e utilizzato nell'ambito dell'applicazione per cui è stato prodotto, secondo le norme di installazione applicabili e le istruzioni del produttore.

2014/35/EU: Low Voltage Directive	2014/30/EU: EMC Directive
2011/65/EU: RoHS2 Directive	2015/863/EU: RoHS3 Directive

È conforme alle seguenti normative o altri documenti normativi:

IEC 61010-1:2010+AMD1:2016 Ed 3.0	IEC 61010-2-030:2017 Ed 2.0
IEC 61326-1:2020 Ed 3.0	IEC 63000:2016 Ed 1.0

Anno di marcatura "CE":

2022

Viladecavalls (Spain), 3/10/2022
Chief Executive Officer: Joan Comellas Cabeza

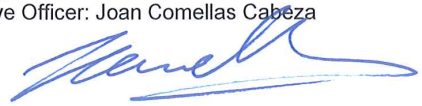



CIRCUTOR, S.A. – Vial Sant Jordi, s/n
08232 Viladecavalls (Barcelona) Spain
(+34) 937 452 900 – info@circutor.com

(PL)

DEKLARACJA ZGODNOŚCI UE

Niniejsza deklaracja zgodności zostaje wydana na wyłączną odpowiedzialność firmy CIRCUTOR z siedzibą pod adresem: **Vial Sant Jordi, s/n – 08232 Viladecavalls (Barcelona) Hiszpania**

produk:

analizator sieciowy

Seria:

CVM-D41 DC mA, CVM-D41 DC V

marka:

CIRCUTOR

Przedmiot deklaracji jest zgodny z odnośnymi wymaganiami prawodawstwa harmonizacyjnego w Unii Europejskiej pod warunkiem, że będzie instalowany, konserwowany i użytkowany zgodnie z przeznaczeniem, dla którego został wyprodukowany, zgodnie z mającymi zastosowanie normami dotyczącymi instalacji oraz instrukciami producenta

2014/35/EU: Low Voltage Directive	2014/30/EU: EMC Directive
2011/65/EU: RoHS2 Directive	2015/863/EU: RoHS3 Directive

Jest zgodny z następującą(ymi) normą(ami) lub innym(i) dokumentem(ami) normatywnym(i):

IEC 61010-1:2010+AMD1:2016 Ed 3.0	IEC 61010-2-030:2017 Ed 2.0
IEC 61326-1:2020 Ed 3.0	IEC 63000:2016 Ed 1.0

Rok oznakowania "CE":

2022

Viladecavalls (Spain), 3/10/2022
Chief Executive Officer: Joan Comellas Cabeza

Circutor
NIF A-08513178
Vial Sant Jordi s/n.
08232 Viladecavalls
Barcelona (Spain)
t. +34 93 745 29 00

ANNEX A.- CONFIGURATION MENU

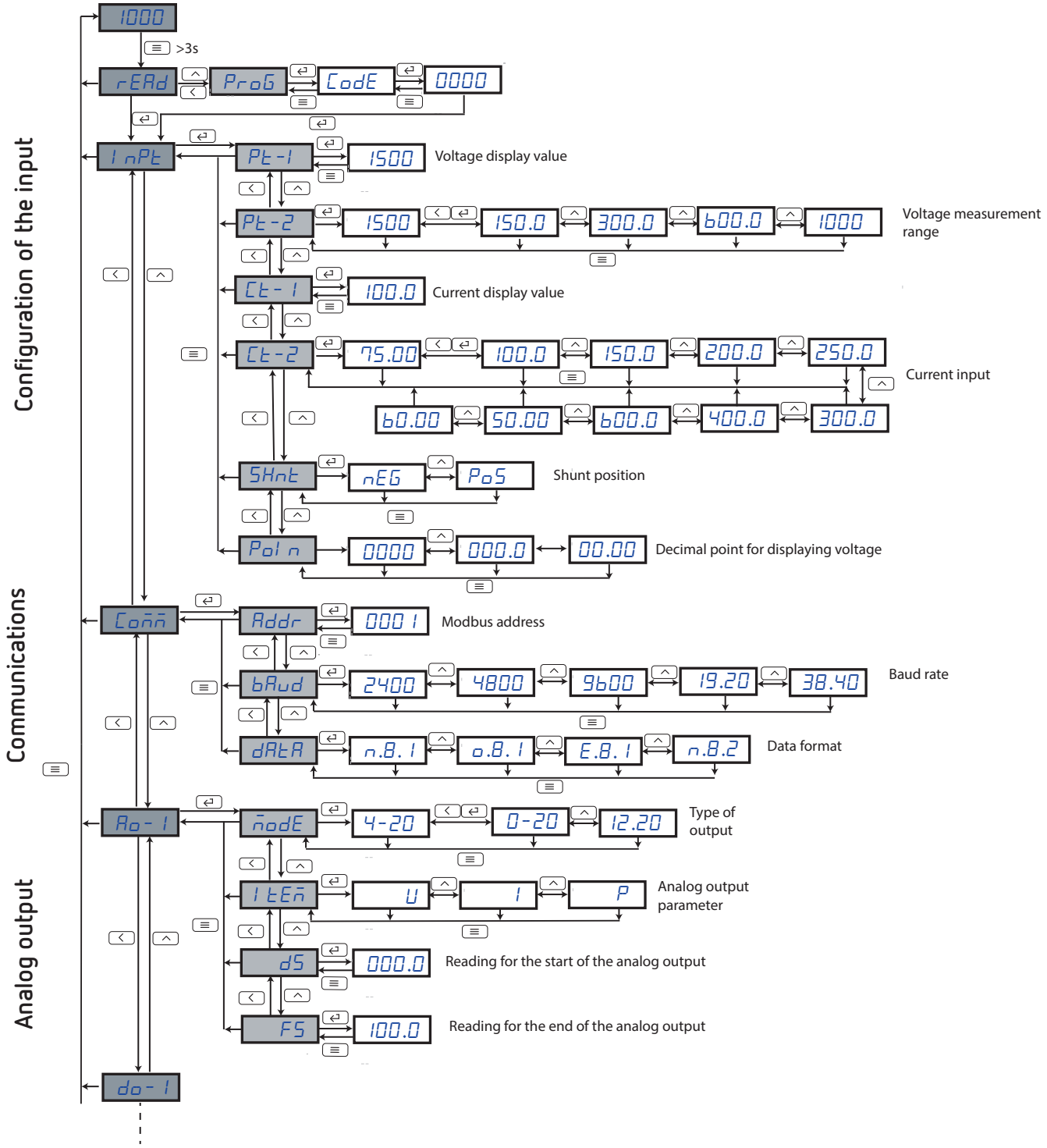

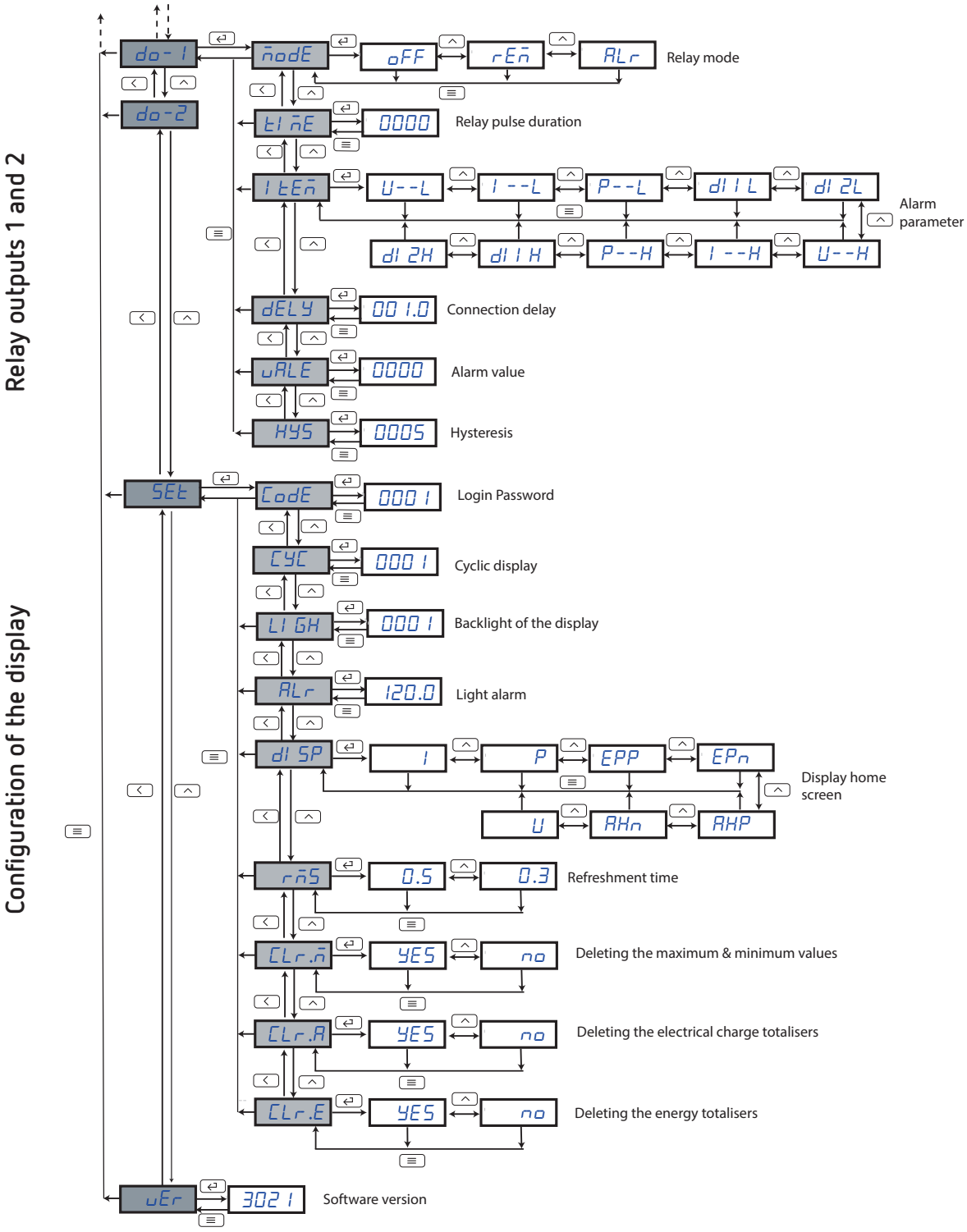
Relay outputs 1 and 2
Configuration of the display
do-1
do-2
nodE
oFF
rEn
ALr
Relay mode
tIME
0000
Relay pulse duration
ItEn
U--L
I--L
P--L
dIIL
dI2L
dI2H
dIIH
P--H
I--H
U--H
Alarm parameter
dELY
001.0
Connection delay
uALE
0000
Alarm value
HYS
0005
Hysteresis
SEt
CodE
0001
Login Password
CYC
0001
Cyclic display
LIGH
0001
Backlight of the display
ALr
120.0
Light alarm
diSP
I
P
EPP
EPn
U
AHn
AHP
Display home screen
rnS
0.5
0.3
Refreshment time
CLr.n
YES
no
Deleting the maximum & minimum values
CLr.A
YES
no
Deleting the electrical charge totalisers
CLr.E
YES
no
Deleting the energy totalisers
uEr
3021
Software version

CIRCUTOR S.A.U.
Vial Sant Jordi, s/n
08232 - Viladecavalls (Barcelona)
Tel: (+34) 93 745 29 00 - Fax: (+34) 93 745 29 14
www.circutor.com central@circutor.com