Rapid charging station

RAPTION 80C



INSTRUCTION MANUAL

(M445B01-03-25A)

CE


22
PAP

COPYRIGHT INFORMATION

Copyright 2025 of this document belongs to **CIRCUTOR**. All rights reserved. **CIRCUTOR S.A.U.** reserves the right to make improvements to the products described in this manual at any time and without prior notice.

No part of this manual may be reproduced, copied, translated or transmitted in any form or by any means without prior written consent from the original manufacturer. The information contained in this manual is intended to be accurate and reliable. However, the original manufacturer assumes no responsibility for its use or for any infringement of third-party rights resulting from its use.

All product names and trademarks belong to their respective owners.

CIRCUTOR reserves the right, at its sole discretion, to make modifications, corrections or changes to this manual and its content at any time, without prior notice.

DISCLAIMER

CIRCUTOR S.A.U. reserves the right to make modifications to the device or the unit specifications set out in this instruction manual without prior notice.

CIRCUTOR S.A.U. on its web site, supplies its customers with the latest versions of the device specifications and the most updated manuals.

www.circutor.com

CIRCUTOR S.A.U. recommends using the original cables and accessories that are supplied with the device.

CONTENTS

COPYRIGHT INFORMATION 3
DISCLAIMER 3
CONTENTS 4
REVISION LOG 6
SYMBOLS 6
1.- INTRODUCTION 7
1.1.- REGULATIONS 8
2.- BEFORE INSTALLATION 9
2.1.- IMPORTANT SAFETY INSTRUCTIONS 9
2.2.- ELECTRICAL WIRING CONSIDERATIONS 10
2.3.- IMPORTANT ELECTRICAL SAFETY INSTRUCTIONS 10
2.4.- PERSONAL PROTECTIVE EQUIPMENT (PPE) 11
2.5.- RECOMMENDED TOOLS 12
2.6.- EVSE CLASSIFICATION (Electric Vehicle Supply Equipment) 12
2.7.- SUPPLY AND STORAGE 13
2.8.- UNLOADING AND HANDLING 14
3.- OVERVIEW AND DIMENSIONS 15
3.1.- OVERVIEW OF THE CHARGING POINT 15
3.2.- CHARGING POINT DIMENSIONS 16
3.3.- DIMENSIONS WITH CABLE MANAGEMENT SYSTEM 17
4.- INSTALLATION 18
4.1.- MINIMUM DISTANCES 18
4.2.- MOUNTING 18
4.2.1.- FOUNDATION KIT 19
4.2.2.- INJECTION MORTAR 23
4.3.- OPENING 24
4.4.- POSITIONING 25
4.5.- WIRING 28
4.5.1.- EARTHING SYSTEM 29
4.5.2.- POWER SUPPLY INPUT CONNECTION 29
4.6.- REMOVAL OF THE POWER AND VENTILATION MODULES 32
4.7.- CABLE MANAGEMENT 32
4.8.- VERIFICATION 36
5.- START-UP 38
5.1.- COMMUNICATIONS CONNECTION DIAGRAMS 38
5.1.1.- CHARGING POINT NETWORK TOPOLOGY 38
5.1.2.- CHARGING POINT WITH DUAL MODEM CONNECTED TO THE CUSTOMER'S NETWORK VIA ETHERNET 39
5.1.3.- CHARGING POINT WITH DUAL MODEM CONNECTED TO THE CUSTOMER'S NETWORK VIA 4G 39
5.2.- CHARGING POINT NETWORK TOPOLOGY 40
5.3.- INTERNAL NETWORK CONNECTIONS 41
5.3.1.- ON SITE 41
5.3.2.- REMOTELY 42
5.4.- USING THE CHARGING POINT 48
6.- TECHNICAL SPECIFICATIONS 49
7.- MAINTENANCE AND TECHNICAL SERVICE 51
8.- GUARANTEE 51

REVISION LOG

Table 1: Revision log.

Date	Revision	Description
05/24	M445B01-03-24A	Initial version
06/25	M445B01-03-25A	Modifications to sections: 3.2. - 4.5. - 4.7. - 5. - 6.

SYMBOLS

Table 2: Symbols.

Symbol	Description
CE	Compliant with the relevant European directive.
	Device covered by European Directive 2012/19/EC. At the end of its service life, do not dispose of the device in a household waste container. Local regulations on the recycling of electronic equipment must be followed.
⎓	Direct current.
~	Alternating current.

Note: *The images of the devices are for illustrative purposes only and may differ from the original device.*

1.- INTRODUCTION

This manual includes installation information for the **CIRCUTOR** Charging Point, which has been designed and tested for charging electric vehicles, as specified in standard IEC 61851.

This document is divided into sections describing the electrical components inside the Charging Point and a step-by-step installation procedure.

The basic safety information provided in this manual must be followed to ensure safe and proper use.

Failure to follow the safety instructions may result in personal injury, damage to the device and a risk of death. **CIRCUTOR** is not responsible for any events resulting from such failure.

THE FOLLOWING SYMBOLS ARE USED TO INDICATE IMPORTANT SAFETY INFORMATION THROUGHOUT THIS DOCUMENT



Electrical hazard

This symbol indicates a potentially hazardous situation which, if not avoided, may result in fire, serious injury or death.

The Charging Point must be disconnected from all power sources before carrying out maintenance, repairs or electrical work inside it.



Warning!

Follow the instructions preceded by this symbol; failure to observe them or carry them out correctly may result in minor or moderate injury to the user, as well as damage to the device, installations or other property.

Using the device may cause injuries due to its size and weight. Anyone handling the device must wear safety footwear and gloves.

1.1.- REGULATIONS

- Compliant with IEC 61851; Electric vehicle conductive charging system (IEC 61851-1, IEC 61851-21-2 and IEC 61851-23).

- Compliant with IEC 62196; Plugs, socket-outlets, vehicle connectors and vehicle inlets. Conductive charging of electric vehicles (IEC 62196-1 and IEC 62196-3).

- Compliant with CHAdeMO certification.

- Compliant with IEC 61851-24, Digital communication between a DC charging station for electric vehicles and an electric vehicle, for the control of DC charging. Complies with the CCS specification, DIN 70121. Ready for ISO 15118.

- Directives: 2014/53/EU, on radio equipment and telecommunications terminal equipment; 2014/30/EU, on electromagnetic compatibility (EMC); 2014/35/EU, Low Voltage Directive.

- The RFID complies with ISO 14443A/B, MIFARE Classic/ DESFire EV1/ ISO 18092/ ECMA-340/ NFC 13.56 MHz [1]

- The meter complies with 2014/32/EU, Measuring Instruments Directive.

- Complies with RoHS 2011/65/EU-2017/2102, Restriction of Hazardous Substances.

[1] Optional: RFID complies with NFC, ISO/IEC 14443A/B, ISO/IEC 15693, ISO/IEC 18092, (Legic Advant, Legic Prime, Sony FeliCA, Calypso).

2.- BEFORE INSTALLATION

2.1.- IMPORTANT SAFETY INSTRUCTIONS



Before starting, read all the instructions carefully to ensure that the Charging Point is installed correctly.

The Charging Point is designed for indoor and outdoor installation. Depending on the installation conditions, the device must be installed securely and provided with adequate protection.

- The Charging Point must not be installed in locations where there may be a risk of explosion or any level of salinity.
- The Charging Point must not be installed in industrial areas with high levels of humidity or contaminants.
- Do not install the Charging Point in locations where objects may fall and damage the device.
- The surface on which the charging point is installed must withstand mechanical forces.
- This device must only be used with the electric vehicle charging modes included in standard **IEC 61851-1**.
- Do not modify the device. If you do, **CIRCUTOR** will reject all liability and the warranty will be void.
- The safety regulations in the country of installation must be strictly complied with.
- Do not repair or handle the device while it is connected to the mains.
- Only trained and qualified personnel may access the electrical components inside the device.
- The installation must be inspected annually by a qualified technician.
- Remove from service any defective item that could pose a danger to users (broken sockets, covers that do not close, etc.).
- Only spare parts supplied by **CIRCUTOR** must be used.
- Do not use the device if the enclosure or the EV (Electric Vehicle) connector is broken, cracked, open or shows any other signs of damage.

2.2.- ELECTRICAL WIRING CONSIDERATIONS

Read this section before making the wiring connections at the Charging Point.

1.- INPUT SUPPLY

The Charging Point input supply line must be wired from a dedicated power transformer or generator and not via LV overhead cables. It must comply strictly with the electrical safety regulations in your country.

2.- SUPPLY CABLE SIZING

A qualified electrician must check the sizing of the Charging Point input supply cable.
Please note that several factors, such as the length of the cable between the distribution board and the Charging Point, the maximum input current of the Charging Point and the installation method, may affect the cable selected. In such cases, it may be necessary to increase the cable cross-sectional area. The installation company is responsible for sizing the cable cross-sectional areas and electrical protection devices, taking the above conditions into account.

3.- MAXIMUM OUTPUT POWER

Depending on the input power line, electric vehicle charging sessions can be carried out at different output power levels; the maximum output power can be limited by software to prevent it from exceeding the available input power. To implement this software limitation, refer to the **User Manual**.

Note: *In chapter* ***"4.- INSTALLATION"*** *, you will find further instructions on the electrical installation required to obtain a safe POWER SUPPLY LINE.*

2.3.- IMPORTANT ELECTRICAL SAFETY INSTRUCTIONS

Read all the instructions carefully before starting to ensure the proper use of electrical components.

A safe working environment is not sufficient to control all possible electrical hazards.
It is recommended to exercise extreme caution and work safely. Therefore, the safety rules below may help to control the risk of injury or death from workplace hazards.

- Avoid contact with live electrical circuits.
- Disconnect the power supply before servicing or repairing electrical devices.
- Use only tools and equipment with non-conductive handles when working with electrical devices.
- Never use metal pencils or rulers, or wear rings or metal watch straps when working with electrical devices.
- Enclose all electrical contacts and conductors so that no one can come into accidental contact with

them.

- When it is necessary to handle a device that is plugged in, ensure that your hands are dry and, whenever possible, wear non-conductive gloves and protective clothing, and footwear with insulating soles.

- Never handle electrical devices with wet or sweaty hands, feet or body, or while standing on a wet floor.

2.4.- PERSONAL PROTECTIVE EQUIPMENT (PPE)

All technical employees must use the following Personal Protective Equipment (PPE), **Figure 1**. It must be used for any electrical task, such as servicing and maintaining the Charging Point.

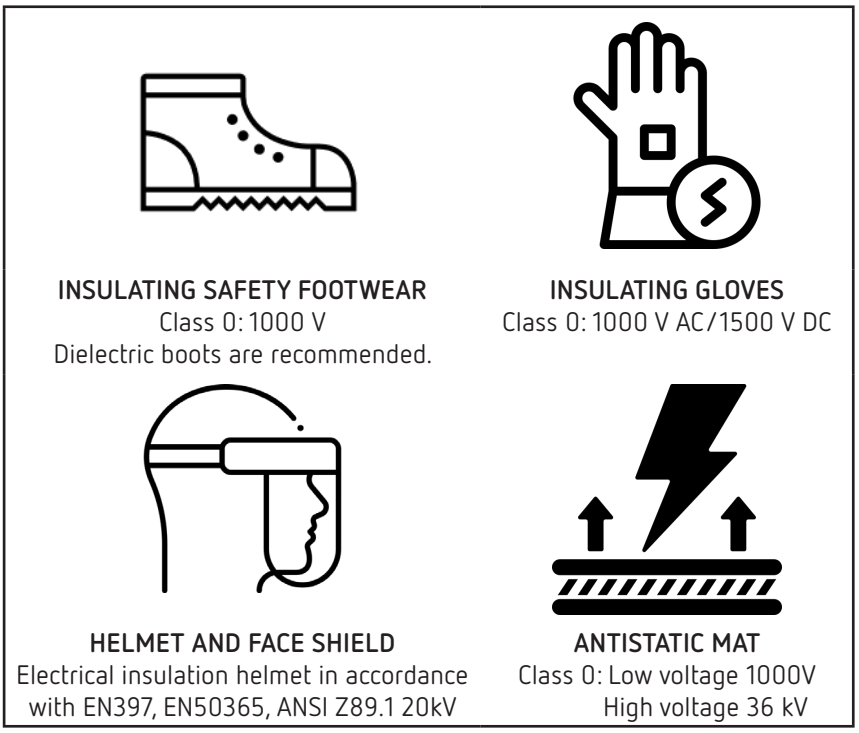

Figure 1: Personal protective equipment (PPE).

2.5.- RECOMMENDED TOOLS

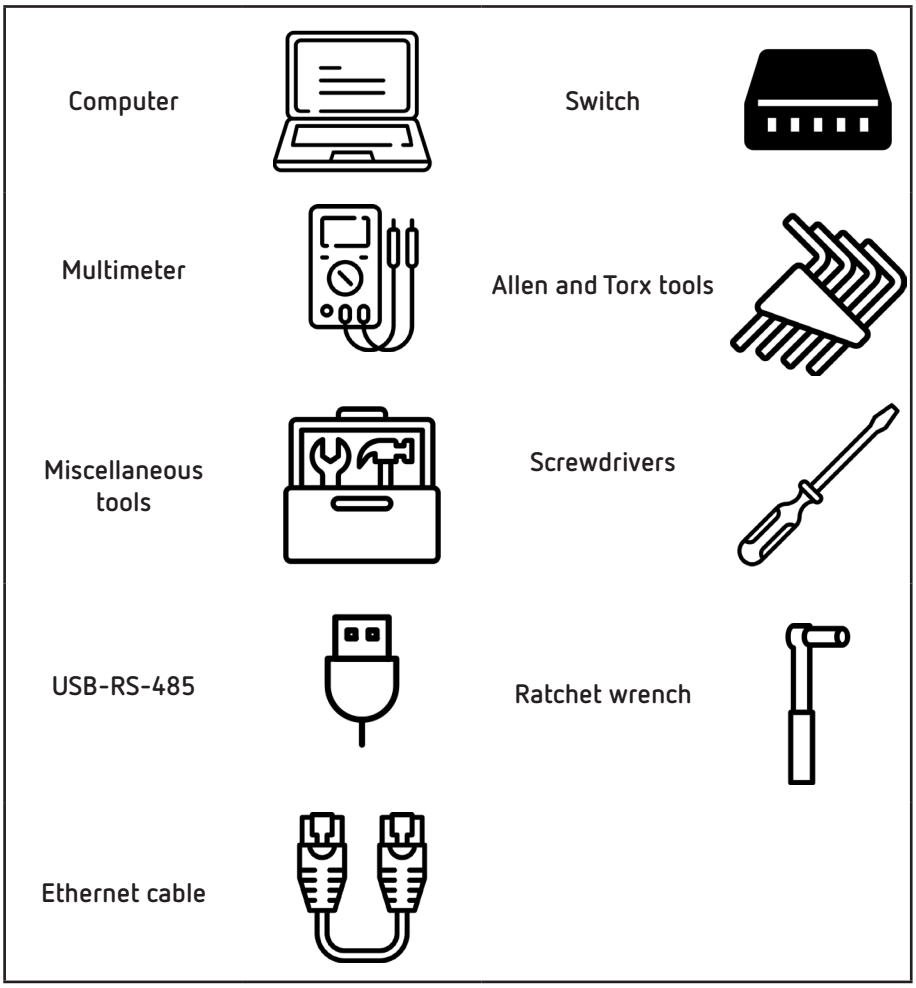

Figure 2: Recommended tools.

2.6.- EVSE CLASSIFICATION (Electric Vehicle Supply Equipment)

Equipment classification according to standard **IEC 61851-1:2017**:

1.- Auxiliary supply, input:

- EV supply equipment connected to the AC supply network.
- Permanently connected.

2.- Auxiliary supply, output:

- EV supply equipment: DC and AC.

3.- Environmental conditions:

- Indoor and outdoor.

4.- Access:

- Device for locations with restricted access.
- Device for locations with unrestricted access.

5.- Mounting method:

- Stationary device.
- Ground-mounted (outdoors) or floor-mounted (indoors).

6.- Protection against electric shock:

- Class I.

7.- Charging modes:

- Mode 4.

2.7.- SUPPLY AND STORAGE

Whenever possible, the Charging Point should be unloaded at its installation and operating location. If it is unloaded at a temporary storage location, it is recommended that the packaging be left in place and that the following minimum storage requirements be met:

- **Safety:** the Charging Point must be protected against harmful factors such as heat radiation, direct sunlight, mechanical damage, exposure to organic solvents, etc.

- **Temperature:** for temperatures below -20 °C and above + 60° C, special care must be taken during storage and handling.

- **Environment:** the Charging Point must be stored in a dry, dust-free location. The distance from any heat source must be at least 1 m. Outdoor storage of the device should be avoided.

The Charging Point includes the items shown in **Figure 3:**

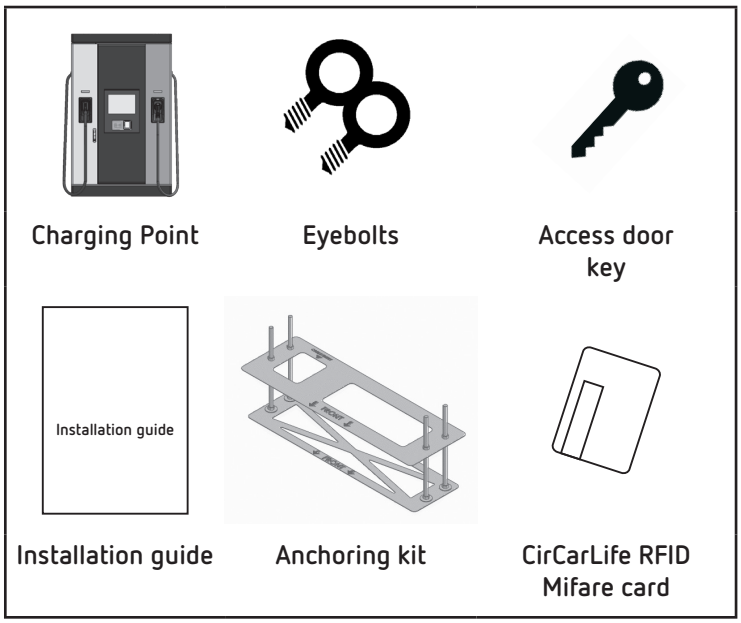

Figure 3: Accessories supplied with the Charging Point.

2.8.- UNLOADING AND HANDLING

All unloading and handling operations involving the Charging Point must be carried out and supervised by qualified personnel, taking into account the considerable weight of the device, complying with safety regulations and using suitable support points.

Important notes:

- The delivery truck only unloads the pallet carrying the Charging Point.
- The delivery truck is not equipped with lifting equipment to move the Charging Point to its final location.
- Placing the Charging Point in its final location is the contractor's responsibility.

Once the Charging Point has been unloaded from the truck, use a forklift truck to move the device to its location, **Figure 4**.



Figure 4: Handling the Charging Point.

The Charging Point includes an impact sensor.
Follow the instructions on the packaging in the event of an accident during transport.

3.- OVERVIEW AND DIMENSIONS

3.1.- OVERVIEW OF THE CHARGING POINT

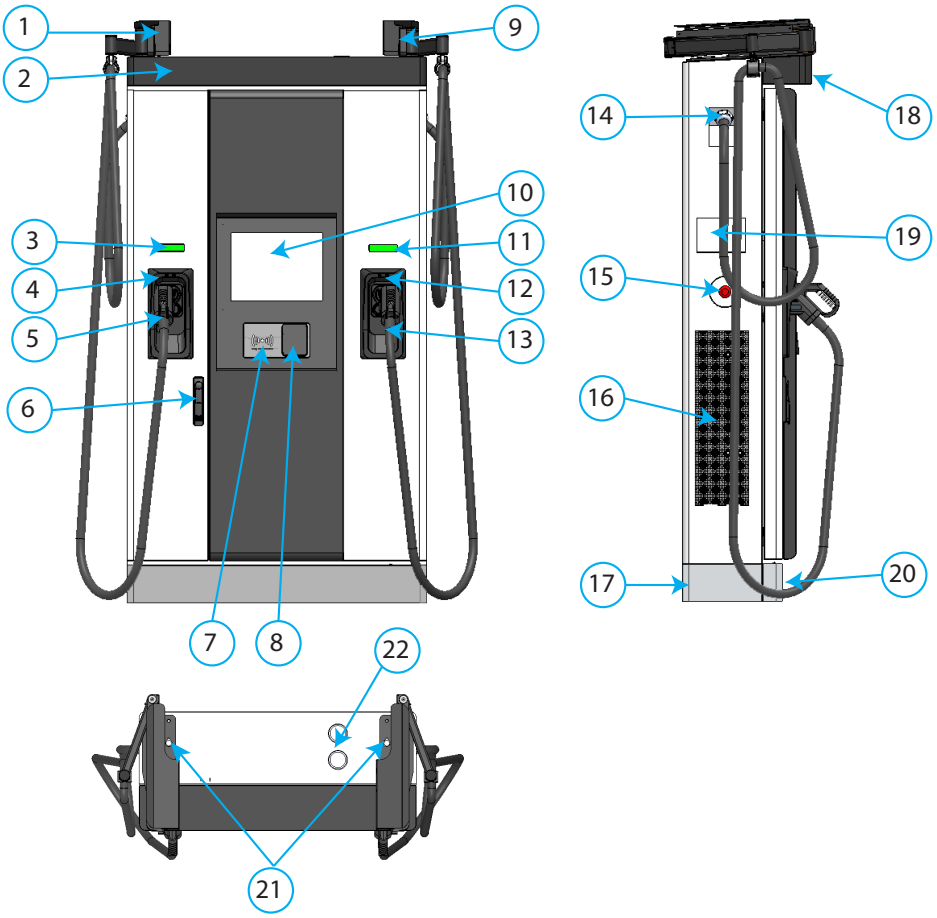

Figure 5: Charging Point overview.

Table 3: Charging Point overview.

Description					
1	CCS A cable management system	9	CHAdeMO/CCS B cable management system	17	Decorative rear panel
2	Cover	10	15" touchscreen	18	Courtesy light
3	CCS A light beacon	11	CHAdeMO/CCS B light beacon	19	Energy metering
4	CCS A holder	12	CHAdeMO/CCS B holder	20	Decorative front panel
5	CCS A connector	13	CHAdeMO/CCS B connector	21	Eyebolts
6	Handle	14	Output cable	22	4G antenna
7	RFID reader	15	Emergency button		
8	Card payment	16	Power module air inlet		

Note: *The components may vary depending on the model.*

3.2.- CHARGING POINT DIMENSIONS

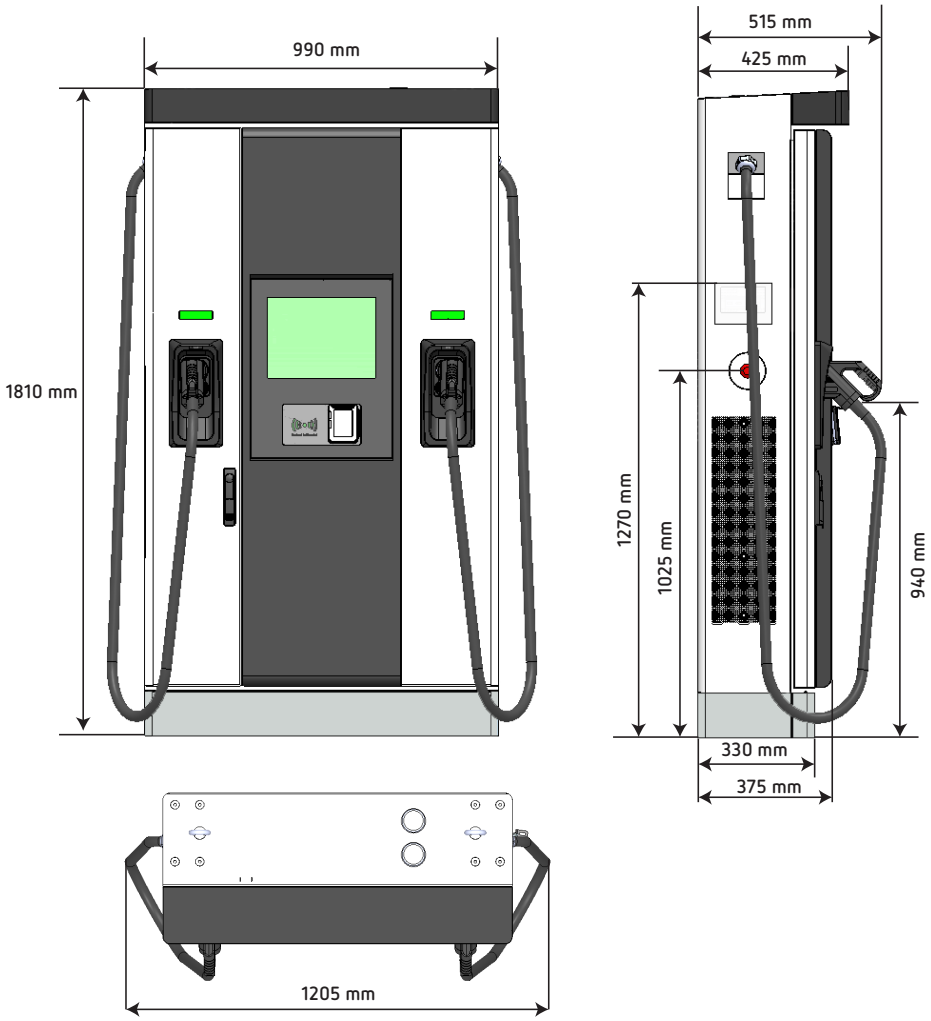

Figure 6: Charging Point dimensions.

Note: *The dimensions are approximate and may vary slightly.*

3.3.- DIMENSIONS WITH CABLE MANAGEMENT SYSTEM

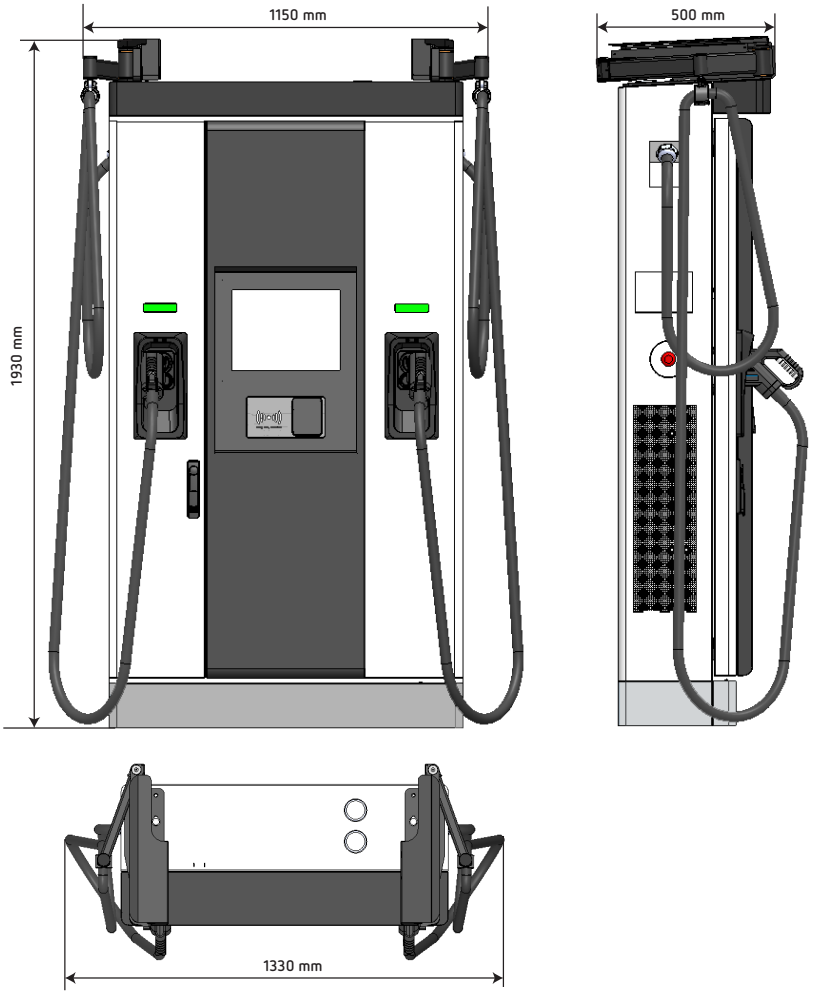

Figure 7: Dimensions with the cable management system.

Note: *The dimensions are approximate and may vary slightly.*

4.- INSTALLATION

4.1.- MINIMUM DISTANCES

When installing the Charging Point, observe the minimum clearance requirements for maintenance and safety reasons. It is important to comply with the specifications applicable in the country of installation.

Figure 8 shows how the device must be installed:

- Do not install it near areas where water or liquids could enter the device.
- Do not install the device on unstable ground.

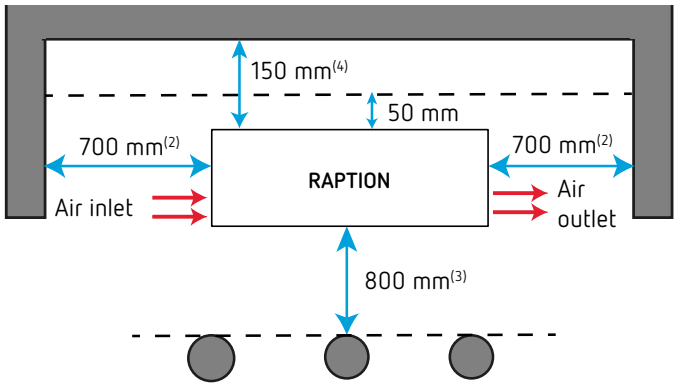

Figure 8: Minimum installation clearances.

(2) Observe the minimum lateral clearance to allow adequate airflow. This device has forced ventilation.
(3) If a bollard impact protector is installed, maintain a clearance of **800 mm** as the minimum distance to provide sufficient space to open the front door of the Charging Point for maintenance tasks.
(4) If a cable management system is installed, maintain a minimum rear clearance of **150 mm** to provide sufficient space to ensure the correct operation of the device.

4.2.- MOUNTING

This section aims to provide a technical definition and explain the basic requirements for positioning the base and anchoring the Charging Point.

- The device can be installed indoors and outdoors.
- Two different options for installing the Charging Point are shown: using the foundation kit supplied or using an injection mortar not included.

4.2.1.- FOUNDATION KIT

A foundation kit is supplied, **Figure 9**, with a mounting template to ensure the distances between the foundation bolts.

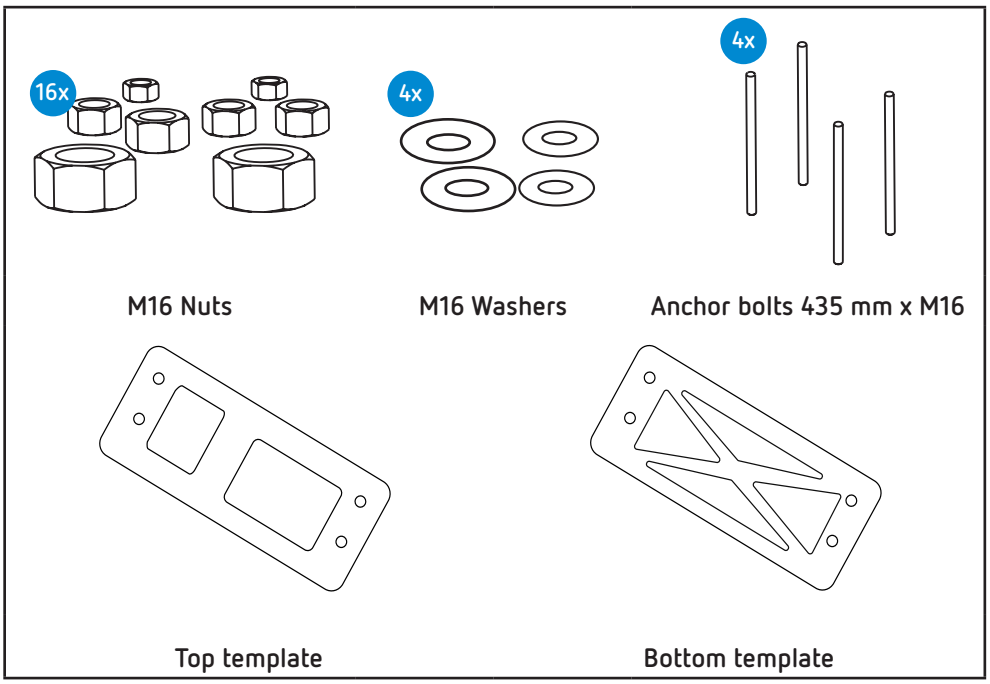

Figure 9: Foundation kit.

Figure 10 shows the dimensions of the top template (all dimensions in mm).

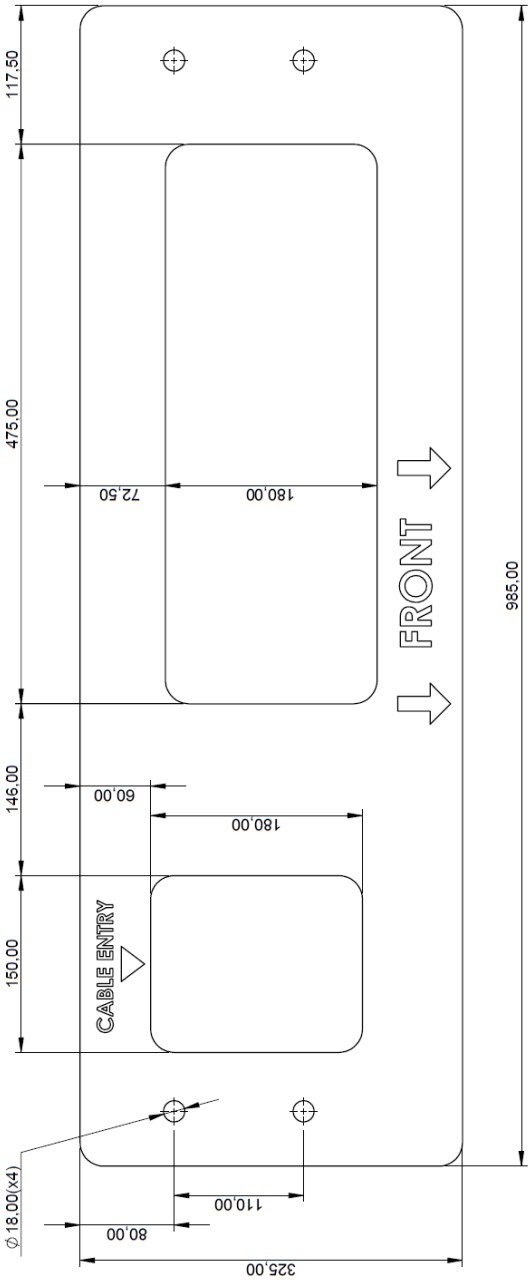

Figure 10: Top template (dimensions).

The installation steps for the Charging Point are:

1.- Fit the anchor bolts into the templates using the nuts supplied, with the aid of a **24 mm open-ended spanner, Figure 11**. Take into account the dimensions shown **Figure 12.**

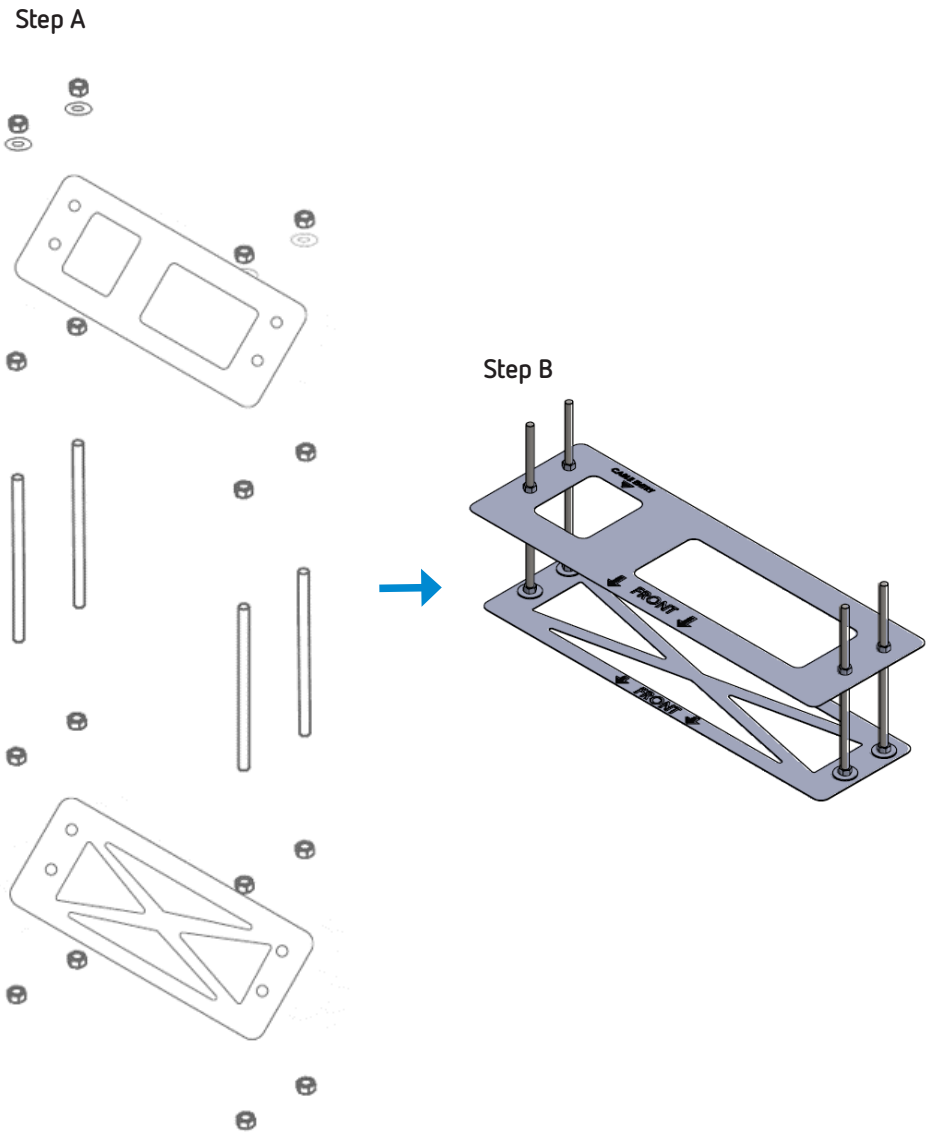

Figure 11: Installation Step 1.

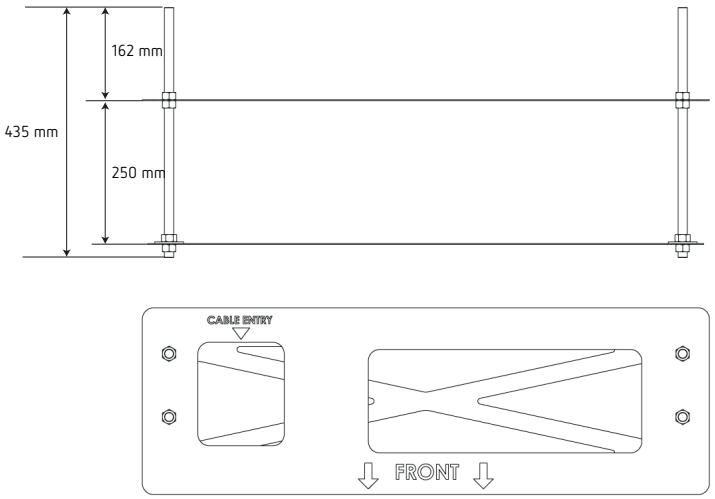

Figure 12: Template installation dimensions.

Before securing the template inside the concrete base, ensure that the front mark faces the front of the device.

2.- Once the kit has been assembled, it must be placed on the ground. If the Charging Point is to be installed outdoors and there is no depth restriction, a concrete base is recommended.

The concrete base must allow the power cables to pass through a corrugated conduit placed inside the base through the mounting template, **Figure 13**.

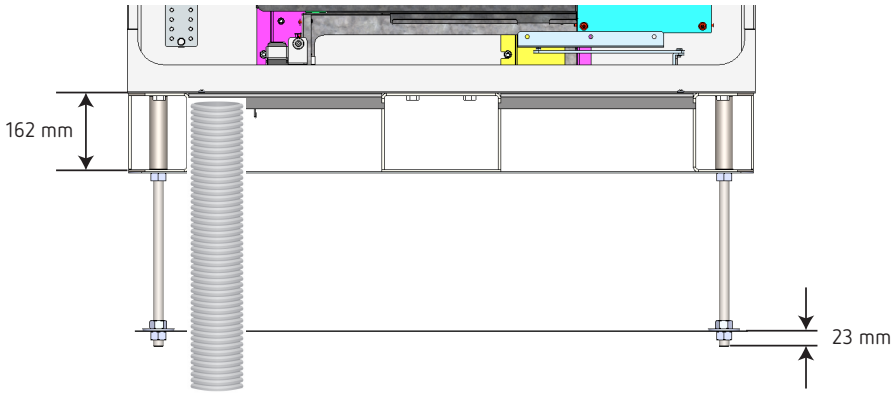

Figure 13: Concrete base installation.

Figure 14 and **Figure 15** show the dimensions and measurements of the concrete base.

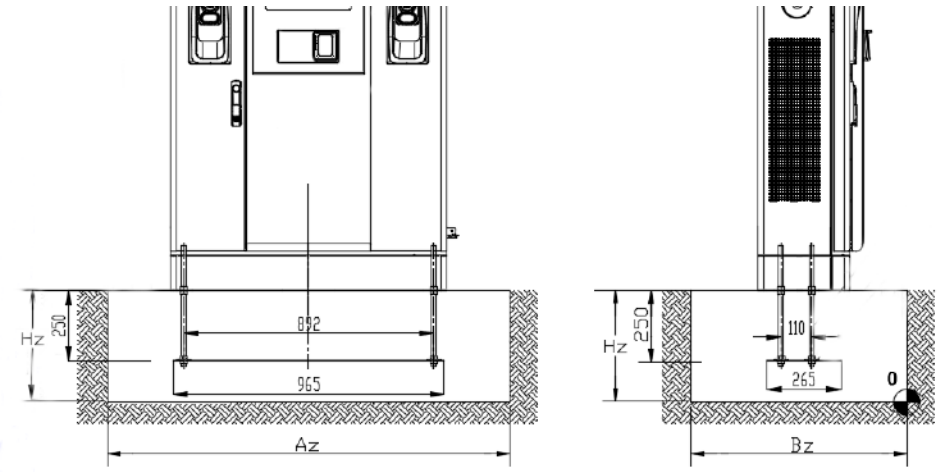

Figure 14: Concrete base dimensions (in mm).

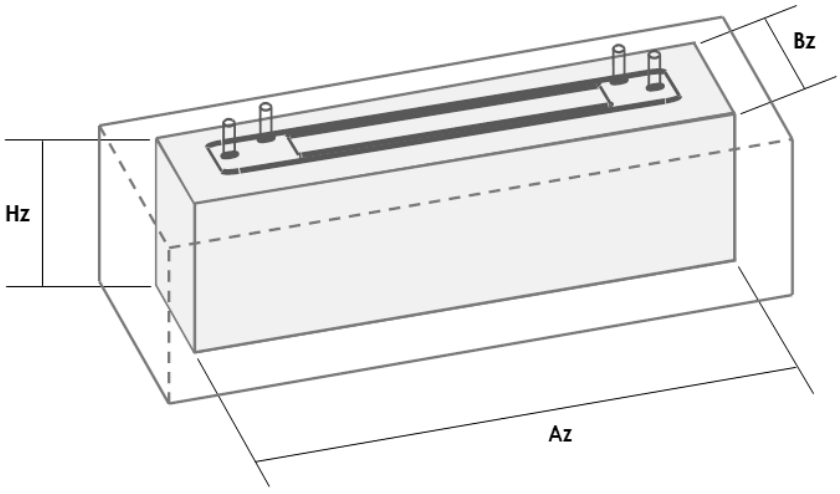

Figure 15: Concrete base measurements.

Table 4: Concrete bases.

Concrete base reference for RAPTION 80C			
SOIL TYPE	Ck (kg/cm²)	Base size (Az x Bz x Hz) cm	COMMENTS
SOFT	5	130 x 70 x 55	For example, uncompacted topsoil.
COMPACT	12	120 x 65 x 50	For example, mixing topsoil with compacted gravel.
VERY COMPACT	20	120 x 60 x 45	For example, mixing sandy soil with highly compacted and paved gravel asphalt.
VERY COMPACT CONCRETE SLAB	20	120 x 60 x 45	Minimum slab edge: 10 cm of HM-100 concrete.

Note: *The figures in **Table 4** are for reference only. The mechanical characteristics of the ground (Ck) and the final design of the concrete base must be determined by qualified personnel in compliance with local civil engineering regulations.*

4.2.2.- INJECTION MORTAR

In specific cases where it is not necessary to dig a trench to install the power supply cables, an alternative fixing method can be used instead of the foundation kit supplied.

As a reference, the foundation kit template can be used to mark where to apply the injection mortar (**Figure 16** marks shown in red).

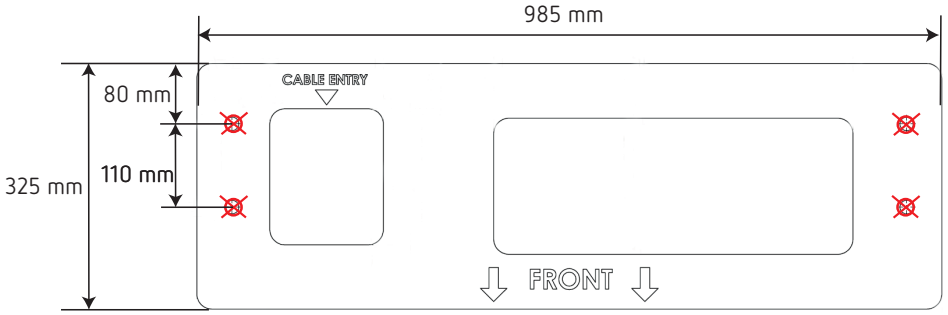

Figure 16: Installation using injection mortar.

The items required for installation are shown in, **Figure 17**:

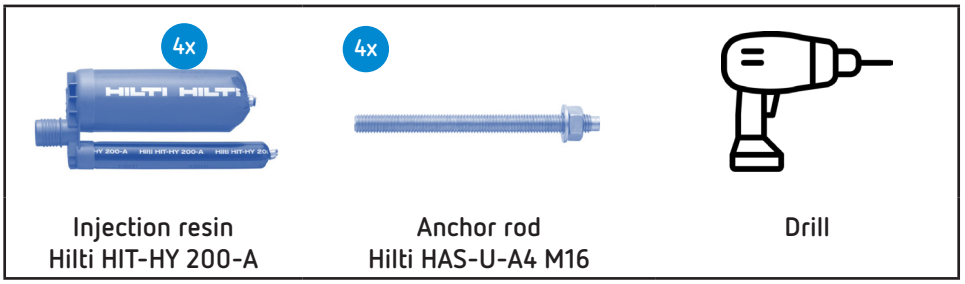

Figure 17: Accessories for installation using injection mortar.

The installation steps for the Charging Point are:

1.- Drill the holes according to the model dimensions specified above.

2.- Once the holes have been drilled, it is essential to:

- Blow out the bottom of the hole twice using compressed air (minimum pressure: **6 bar**).

- Brush the hole twice using a wire brush.

- Blow out the bottom of the hole twice again using compressed air (minimum pressure: **6 bar**).

3.- Inject the resin into each hole as specified in the manufacturer's data sheet.

4.- Insert the anchor rod into each hole as specified in the manufacturer's data sheet.

5.- Position the Charging Point using the inserted anchor rod and tighten the washer.

Notes:

*The calculations described above are for reference purposes only. If necessary, consult the Support Department of **CIRCUTOR**, **sat@circutor.com**, to download the original report on fixing the Charging Point.*

If there are any concerns regarding the ground conditions at the Charging Point installation site, or if a different injection mortar model is used, a final solution for installing the device must be defined. The solution must be confirmed by a specific technical project prepared by an architectural firm before installation.

4.3.- OPENING

The steps for opening the device are shown in **Figure 18**:

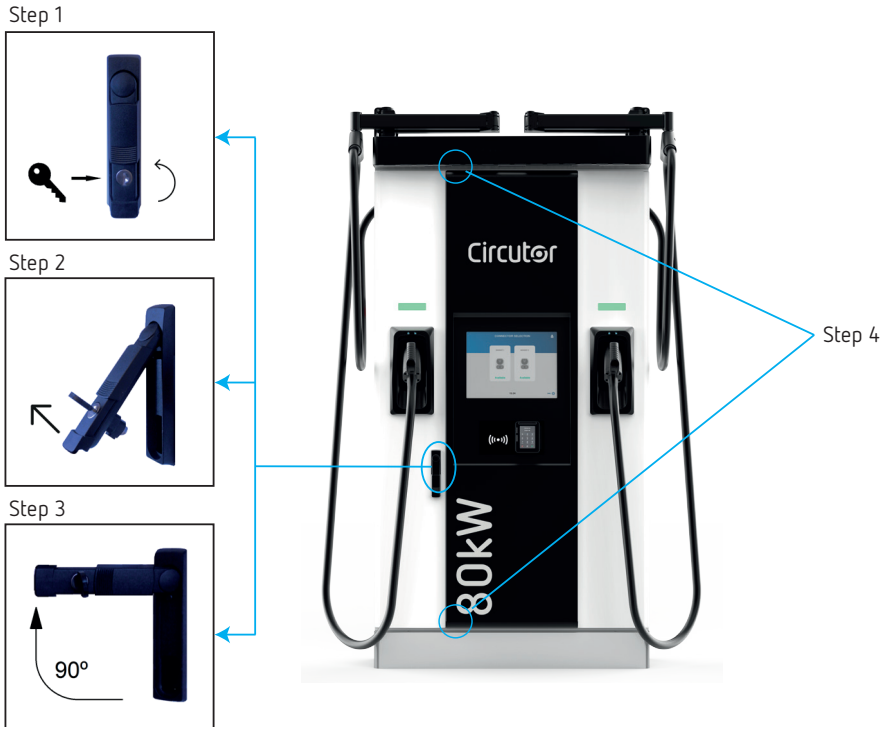

Figure 18: Opening the device.

Step 1: Insert the supplied key into the lock and turn it 90° anticlockwise.

Step 2: Pull the handle backwards.

Step 3: Turn the handle 90° clockwise. The left-hand door can now be opened.

Step 4: Pull the right-hand door (there are two magnets, as shown in **Figure 18**).

4.4.- POSITIONING

To position the Charging Point in its final location, follow these steps:

1.- REMOVING THE CHARGING POINT FROM THE PALLET

The Charging Point is mounted on a pallet to ensure safe transport. It must be removed from the pallet before installation.

Steps:

1- Remove the screws from the decorative front panel (on both sides) and pull it outwards, **Figure 19**.

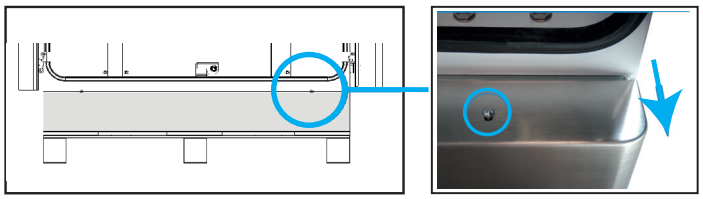

Figure 19: Step 1.

2- Once the decorative front panel has been removed, locate the screws securing the pallet. Remove them using a 17 mm hook spanner, **Figure 20**.

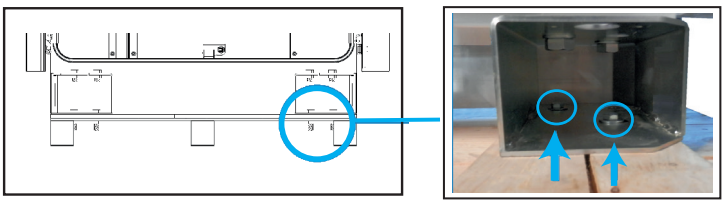

Figure 20: Step 2.

2.- POSITIONING THE CHARGING POINT IN ITS FINAL LOCATION

Once the Charging Point has been removed from the pallet, there are two options for moving it to its final location.

A.- Moving the Charging Point using eyebolts

Steps:

Step 1: Fully remove the two protective thread caps provided for the lifting eyes on the top of the Charging Point (**Figure 21**)

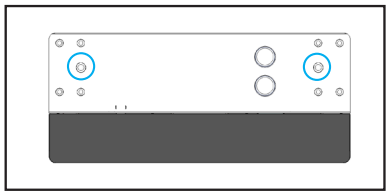

Figure 21: Step 1.

Note: *If necessary, the caps can be levered off using a pointed tool.*

Step 2: Manually screw in the supplied eyebolts and ensure that they are securely tightened, **Figure 22**.

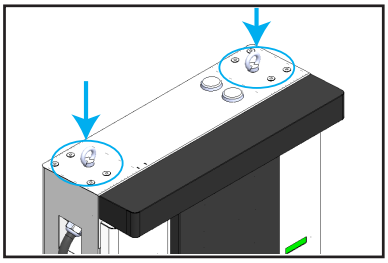

Figure 22: Step 2.

Step 3: Attach the sling to the eyebolts, raise the Charging Point and place it in its final position, **Figure 23**.

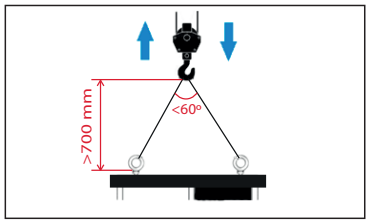

Figure 23: Step 3.

Step 4: Tighten the 4 x M16 nuts with washers onto the threaded rods already installed in the base (as a reference, they should be at the height of the decorative panel), then refit the front decorative panel, **Figure 24**.

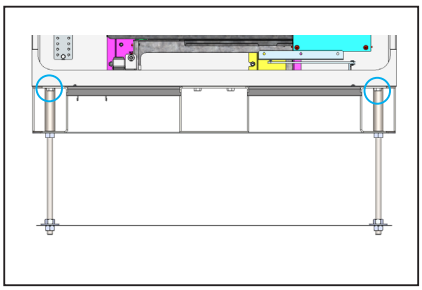

Figure 24: Step 4.

Step 5: Decide whether to leave the eyebolts in place or remove them and fit the thread protection caps removed previously, **Figure 25**.

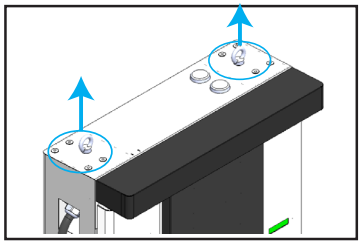

Figure 25: Step 5.

B.- Move the Charging Point using a manual pallet truck or forklift truck.

Steps:

Step 1: Remove the rear decorative panel. Pull the metal tab outwards (on both sides), **Figure 26**.

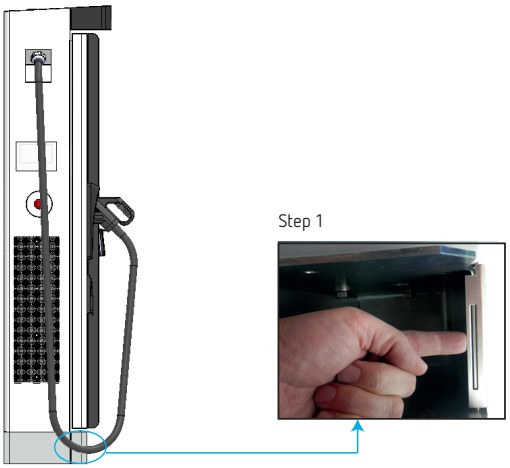

Figure 26: Step 1.

Step 2: Remove the metal clip (on both sides) and take off the rear decorative panel, **Figure 27**.

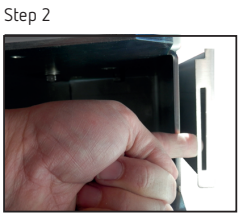

Figure 27: Step 2.

Once the decorative panels have been removed, there will be sufficient clearance (**560 mm**) to insert the forks of the pallet truck or forklift truck**, Figure 28.**

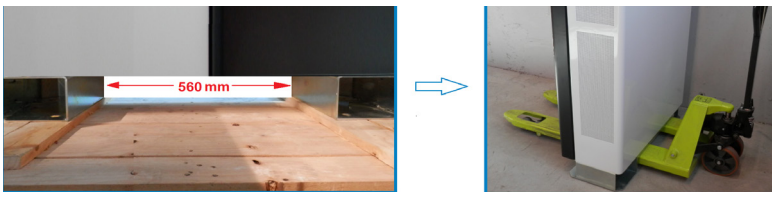

Figure 28:Inserting the pallet truck forks.

For both cases:

> **Once the Charging Point has been installed, remember to fit the Allen screws supplied in the decorative panel (Figure 29).**

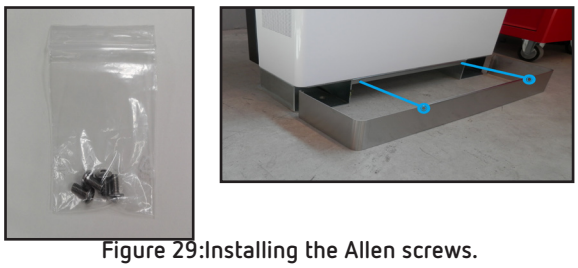

Figure 29:Installing the Allen screws.

4.5.- WIRING

Regardless of the electrical characteristics of the power supply line, ensure that the Charging Point has the required electrical characteristics, as indicated on the device rating plate, namely: supply voltage, mains frequency and required apparent power. If the characteristics of the power supply line differ from those required, the necessary adaptations must be made to meet this requirement.

To ensure complete protection of users and the installation (including the power supply line) against any electrical hazard, a moulded-case circuit breaker (MCCB, with a minimum rated short-circuit breaking capacity of **10 kA**) and a residual current device (type B RCD with a rated residual operating current greater than **30 mA**[5]) must be installed upstream of the **400 V~** power input of the charging device, in accordance with the wiring diagrams.

These electrical protection devices, as well as the rest of the installation, must comply with local and national standards; in addition, discrimination between the protection devices must be ensured at all times.

In **TT** and **TN** earthing systems, the earth loop impedance measurement for the entire installation must be less than **240 Ω** if a **100 mA** RCD is used, to ensure a touch voltage below **24 V**. These values may vary depending on national regulations.

It is recommended that these conditions be maintained over the years. Therefore, qualified personnel should verify the earthing installation at least once a year, during the driest time of year.

Before connecting the cables to the Charging Point, check the following:

- After unpacking the Charging Point, ensure that all the electrical components are in good condition.

- It is recommended that local regulations be followed strictly when determining the appropriate cross-sectional area of the power cables supplying the device, and that the technical data specified below be complied with as a minimum at all times.
- Ensure that the power supply is properly disconnected before starting the installation of the Charging Point, and secure the switches in the main panel (MCCB or fuses) to prevent them from being operated accidentally.

- After installation, seal all the openings inside the Charging Point to prevent foreign objects, dirt,

animals, etc. from entering.

[5] Type B RCD in accordance with the selectivity requirements of IEC 60364-5-53, as the Charging Point has electronic power converters for the DC output, and rated above 30 mA, as the Charging Point has a 30 mA RCD for the auxiliary circuit.

4.5.1.- EARTHING SYSTEM

The appropriate earthing system must be **TT**, **TN-S**, **TN-C** or **TN-C-S** (the last two are not compatible with the models for which the surge protection option has been selected).

The **IT** earthing system is not compatible with our Charging Point.

Note: *In the case of a **TN-C** earthing system, an additional cable must be connected from the earthing plate to the neutral conductor of the MCB, and the **PEN** conductor must be connected directly to the main **PE** busbar. As an RCD is installed upstream of the control circuit, but not on the power side, the installer must take the standard **IEC 61851-23** into account to ensure adequate fault protection.*

The neutral conductor provided by the installer to connect the busbar **PE** and the main switch/MCCB must be a blue conductor H07V2-K with a cross-sectional area of at least **16 mm²** and must be connected at both ends using a suitable ring terminal.

4.5.2.- POWER SUPPLY INPUT CONNECTION

4.5.2.1.- Connection cables (power circuit)

The Charging Point must be supplied with the following connections, **Figure 30**:

1.-Three-phase + Neutral (400 V 50 Hz)
2.- Earth cable

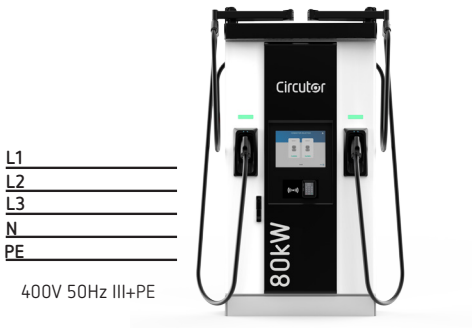

Figure 30: Power circuit connection.

4.5.2.2.- Connection cables (control circuit)

If the supply voltage is **480 V,** a **10 kVA** step-down transformer must be installed to reduce the voltage from 480 V to 220 V and ensure the correct operation of the Charging Point. There is a dedicated terminal block to which the control circuit must be connected, **Figure 31**.

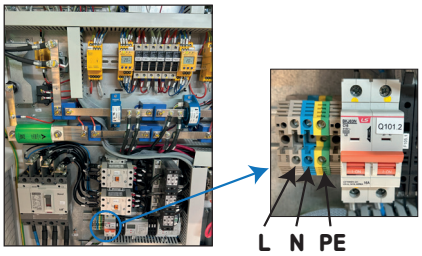

Recommended cable cross-sectional area **≤ 6 mm²**
Tightening torque: **1.6 Nm**

Figure 31: Connection cables (control circuit).

4.5.2.3.- Metal plate

The metal plate supplied must be used to ensure that the cables are installed safely.
If this metal plate is not used, any damage to the internal components caused by the ingress of dirt, animals or any other external element is excluded from the device warranty provided by **CIRCUTOR**.

Steps:

1.- Locate the power supply inlet at the bottom left of the Charging Point, **Figure 32**.

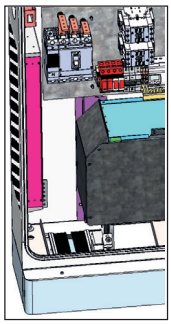

Figure 32: Step 1.

2.- The metal plate has a brush on each side. In the initial position, these brushes are located at the ends. Position the power supply connection cables, applying a maximum tightening torque of **27 Nm, Figure 33**.



Figure 33: Step 2.

3.- Once the cables are between the brushes, both must be adjusted towards the centre until they fully cover the entire surface, using a tightening torque of **3 Nm, Figure 34**.

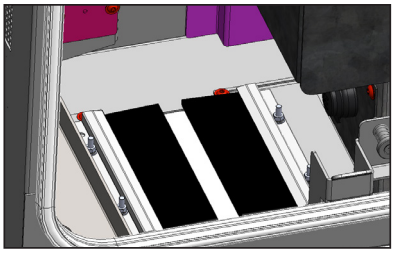

Figure 34: Step 3.

4.- If an Ethernet cable needs to be installed, insert a cable of the recommended type, **S/FTP Cat5e**, through the plate together with the power cables, and connect it to the dedicated input indicated in **Figure 35**.

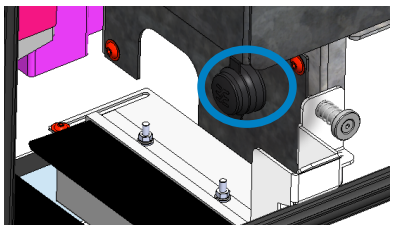

Figure 35: Step 4.

Note: *It is strongly recommended that polyurethane foam be used after installing the power cables in the Charging Point to ensure a proper seal.*

4.5.2.4.- Wiring

Table 5: Wiring.

	PHASE	NEUTRAL	PE
Minimum recommended cable cross-sectional area[6]	70 mm^2 [7]	35 mm^2 [7]	35 mm^2

[6] Minimum recommended cable cross-sectional area for the maximum AC input current (refer to the data sheet), using multicore copper cables with three loaded conductors for installation in conduit in a thermally insulated wall (method A2 according to **IEC-60364-5-52**). Safety factors not considered.

The final cross-sectional area may differ if another installation method is used. In any case, it must be calculated by the installer, taking into account the cable materials, installation conditions and distances.

[7] **95 mm^2** is the maximum cable cross-sectional area accepted by the main circuit breaker.

4.6.- REMOVAL OF THE POWER AND VENTILATION MODULES

To access the power modules and ventilation components, the acoustic deflectors shown below must be removed.

Before

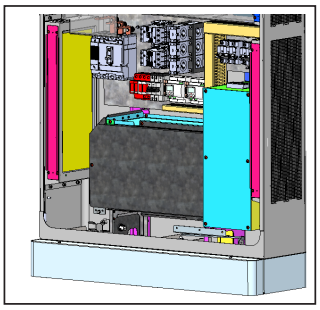

After

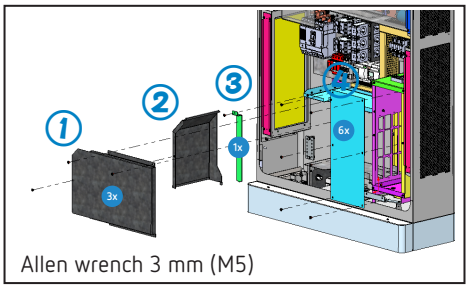

Figure 36: Removing the power modules.

Steps (Figure 36):

1.- First remove the acoustic panel located at the front: 3 screws.

2.- Remove the acoustic panel located at the side: not screwed in place, remove manually.

3.- Remove the acoustic panel located at the rear: 1 screw.

4.- Remove the front-right panel to access the ventilation components.

Note: *If access to the power modules only is required, follow steps 1 to 3. Otherwise, if access to the ventilation components only is required, simply remove the acoustic deflector in step 4.*

4.7.- CABLE MANAGEMENT

If the optional cable management system is selected and is not factory-fitted, follow the steps below to install this component in your Charging Point.

If the optional cable management system is selected and factory-fitted, go directly to **step 4** to complete the installation.

Steps:

1-. Remove the four screws on each side of the top of the Charging Point reserved for cable management using a 6 mm Allen key (those indicated in **Figure 37**).

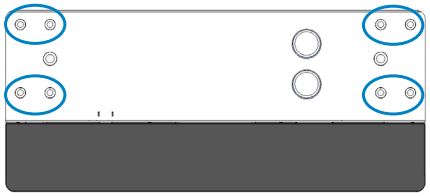

Figure 37: Step 1.

2.- Fit each cable management system and check that the screw holes align with those from which the 4 screws were removed in **Step 1**. Use the same screws for installation, using a 6 mm Allen key and a tightening torque of 50 Nm, **Figure 38**.

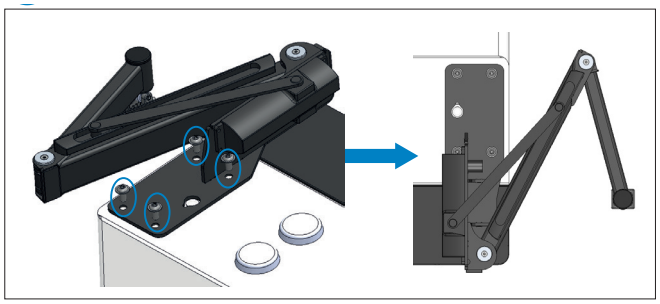

Figure 38: Step 2.

Notes:

The cable management system is ideally designed for cables up to 5.5 metres long.
It is strongly recommended that this task be carried out by two technicians.

3.- Place the metal sheet on top of the cable management system. Locate the screw shown in **Figure 39 T25 INV Torx** key with a tightening torque of **7 Nm**.

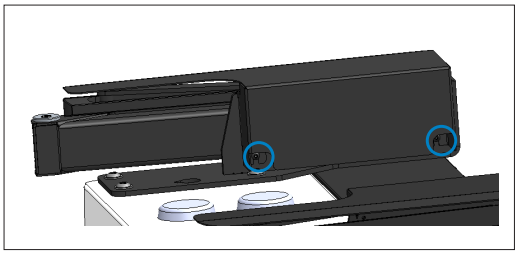

Figure 39: Step 3.

4.- Manually position the cable holder at the end of each cable management system, **Figure 40**.

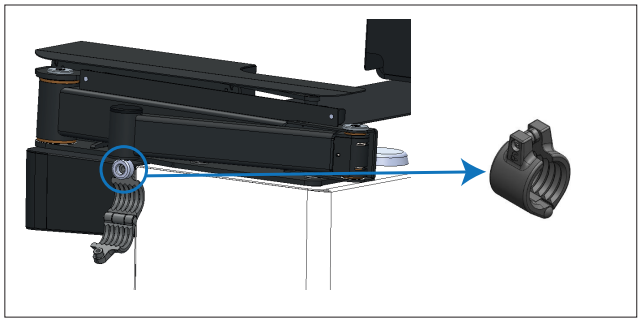

Figure 40: Step 4.

5.- Place the CCS or CHAdeMO cable inside the holder, **Figure 41**.

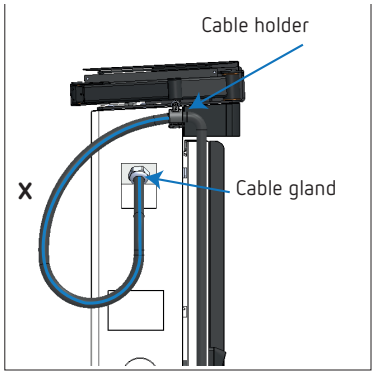

Figure 41: Step 5.

The distance between the cable gland and the start of the cable holder (shown as an **X** in **Figure 41**) must be taken into account so that the cable has maximum reach or does not lie on the ground.

Maintaining this distance, refer to **Table 6** for the operating range according to the cable length:

Table 6: Operating range.

Cable length	Distance from the cable gland to the cable holder (X)	Operating range	
5.5 m	~ 130 cm	~ 4.5 m	Maximum operating range
	~ 240 cm	~ 3.5 m	Cable not laid on the ground

Note: *Place the cable on the holder following the same loop shown in the **Figure 41** to ensure optimum cable operation.*

Possible layouts with a 5.5-metre cable:

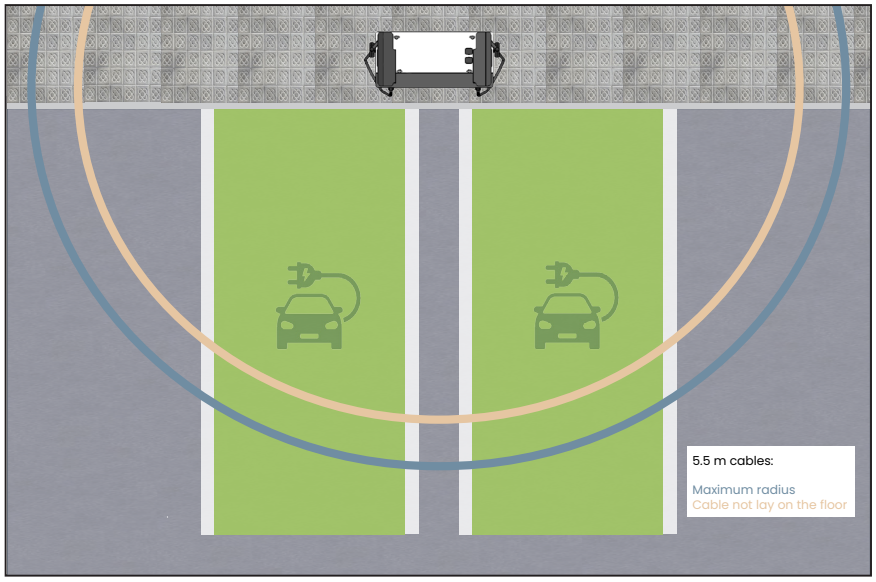

Figure 42: Perpendicular parking spaces.

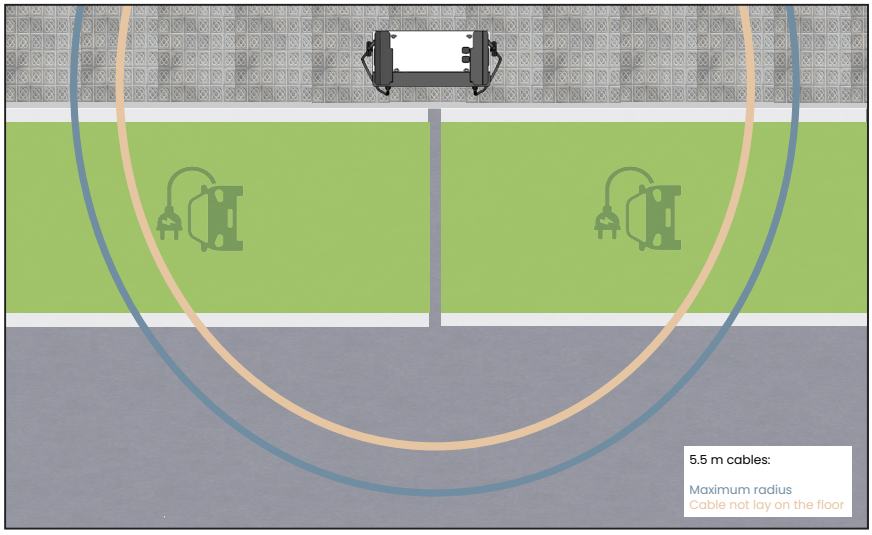

Figure 43: Parallel parking spaces.

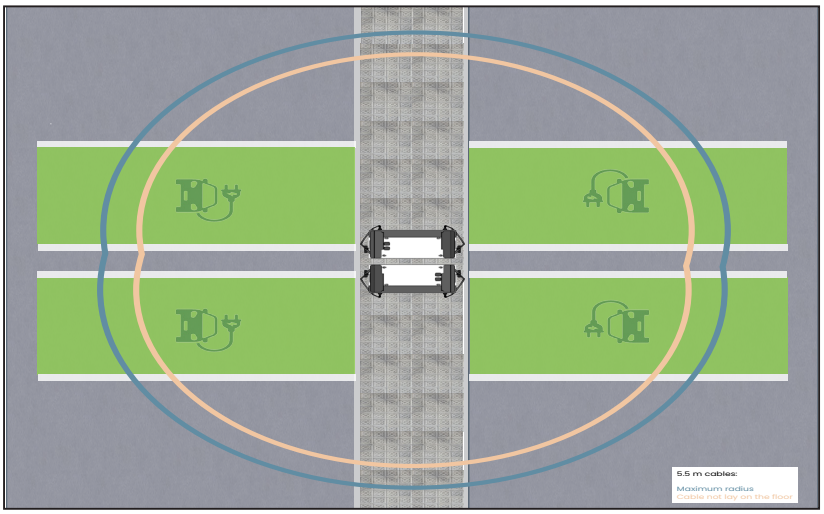

Figure 44: Multiple parking spaces.

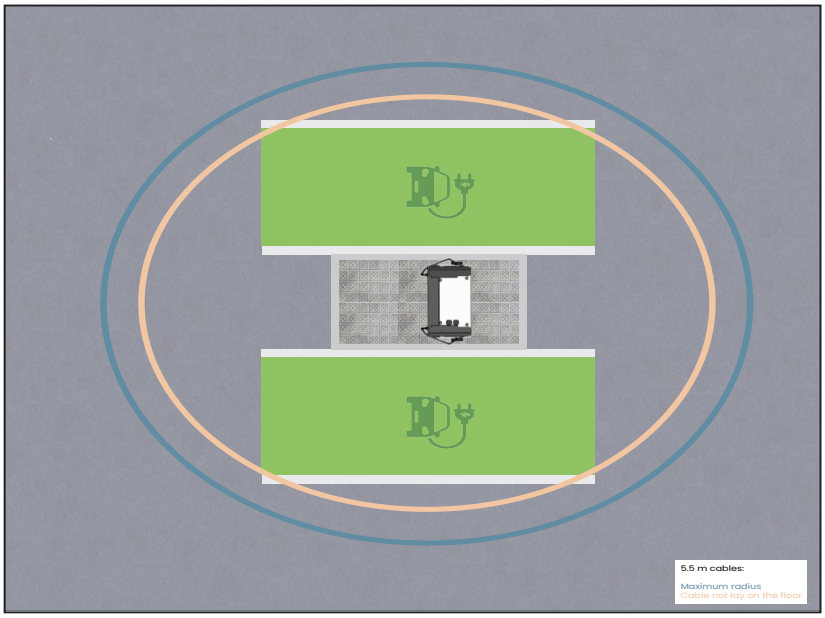

Figure 45: Open parking spaces.

Note: *The measurements, areas and proportions shown in the drawings are approximate and are provided for illustrative purposes only.*

6.- Position the cable on the holder at the distance shown in the previous step, **Figure 46**.

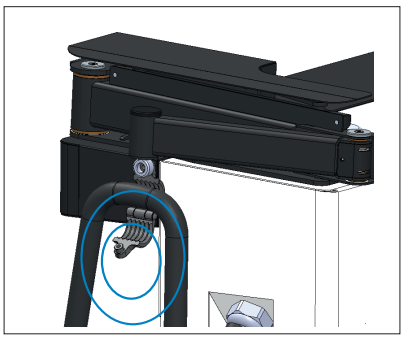

Figure 46: Step 6.

7.- Fit the cable support housing using a Torx screw **T25 INV** with a tightening torque of **7 Nm, Figure 47**.

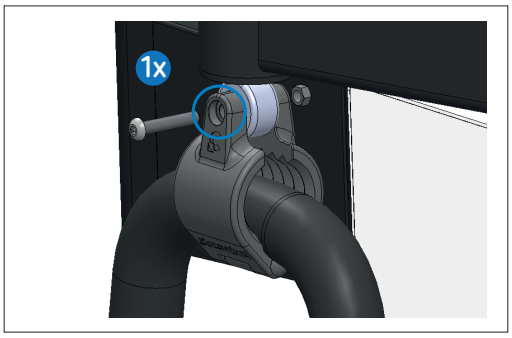

Figure 47: Step 7.

Next, make sure that the cable is securely fastened to the cable support and cannot move to the right or left.

Finally, check that the cable support is correctly adjusted and repeat the steps if the cable is on the ground.

Notes:
Clean the metal sheet guide of the cable-assisted system by blowing or brushing it; do not apply silicone or oils.
The door closer force cannot be adjusted.

4.8.- VERIFICATION

Once the entire installation process has been completed, check the following:

- Check that all MCBs and RCDs, the main switch and the isolators are switched on.
- Check that all safety labels are correctly positioned.
- Close the Charging Point doors:

- Make sure that the door is correctly locked.
- The Charging Point is fitted with a safety switch (tamper protection) that prevents charging sessions if the doors are opened.

- Check that all beacons are illuminated green.

- Check that the EV connectors are in good condition.

- Make sure that the ventilation airflow is correct and that there are no obstructions at the air inlets and outlets.

- Check that there is no abnormal noise while a vehicle is charging.

- Finally, complete the commissioning form. During commissioning of the Charging Point, the commissioning form, which can be requested from **sat@circutor.com**, must be completed and returned to the same email address.

5.- START-UP

After installing and checking the Charging Point in the previous steps, certain communication settings must be configured according to the selected network topology.

Information is also provided on how to access the configuration web page, both locally and remotely.

The modem is fully configured by default at CIRCUTOR.
Do not change the settings unless strictly necessary.

5.1.- COMMUNICATIONS CONNECTION DIAGRAMS

Immediately after installing the Charging Point, select the network topology that best suits the customer's setup.

5.1.1.- CHARGING POINT NETWORK TOPOLOGY

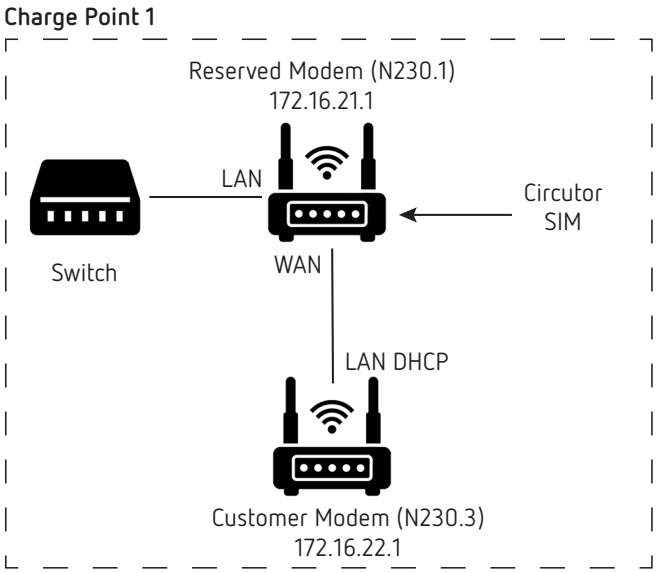

Figure 48: Charging Point network topology.

5.1.2.- CHARGING POINT WITH DUAL MODEM CONNECTED TO THE CUSTOMER'S NETWORK VIA ETHERNET

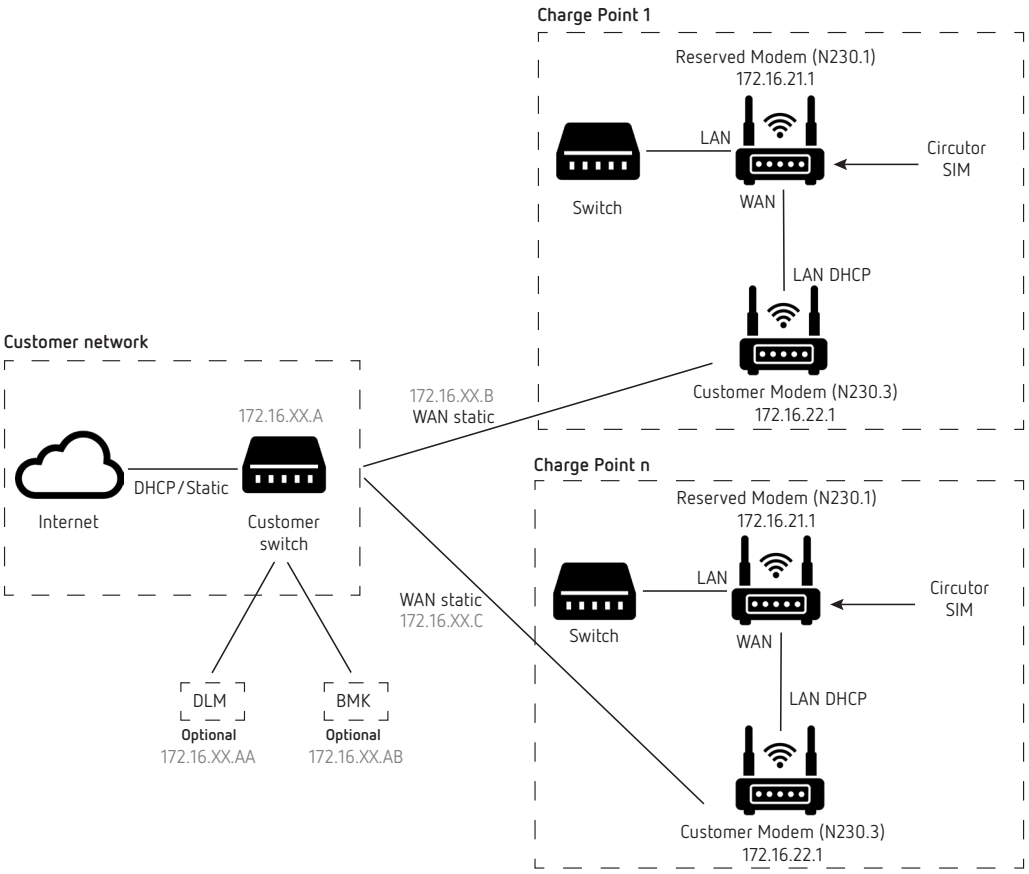

Figure 49: Charging Point with dual modem connected to the customer's network via Ethernet.

Note: *IP topology shown in grey; all IP addresses must be within the same range.*

5.1.3.- CHARGING POINT WITH DUAL MODEM CONNECTED TO THE CUSTOMER'S NETWORK VIA 4G

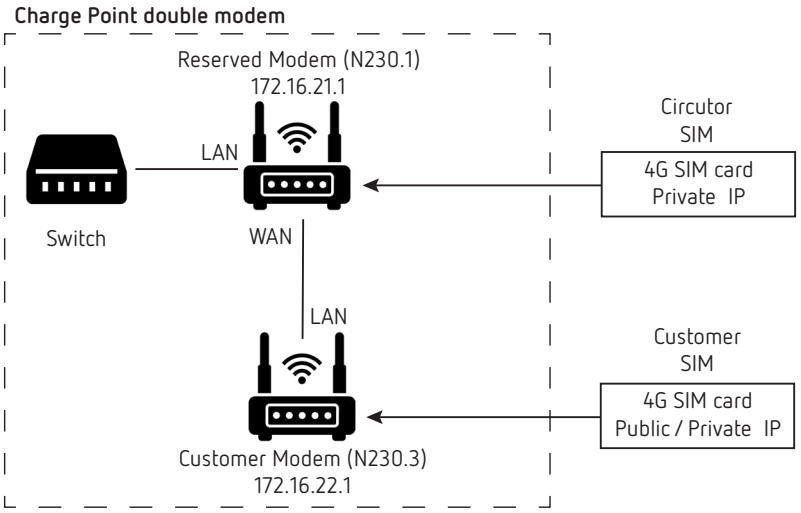

Figure 50: Charging Point with dual modem connected to the customer's network via 4G.

5.2.- CHARGING POINT NETWORK TOPOLOGY

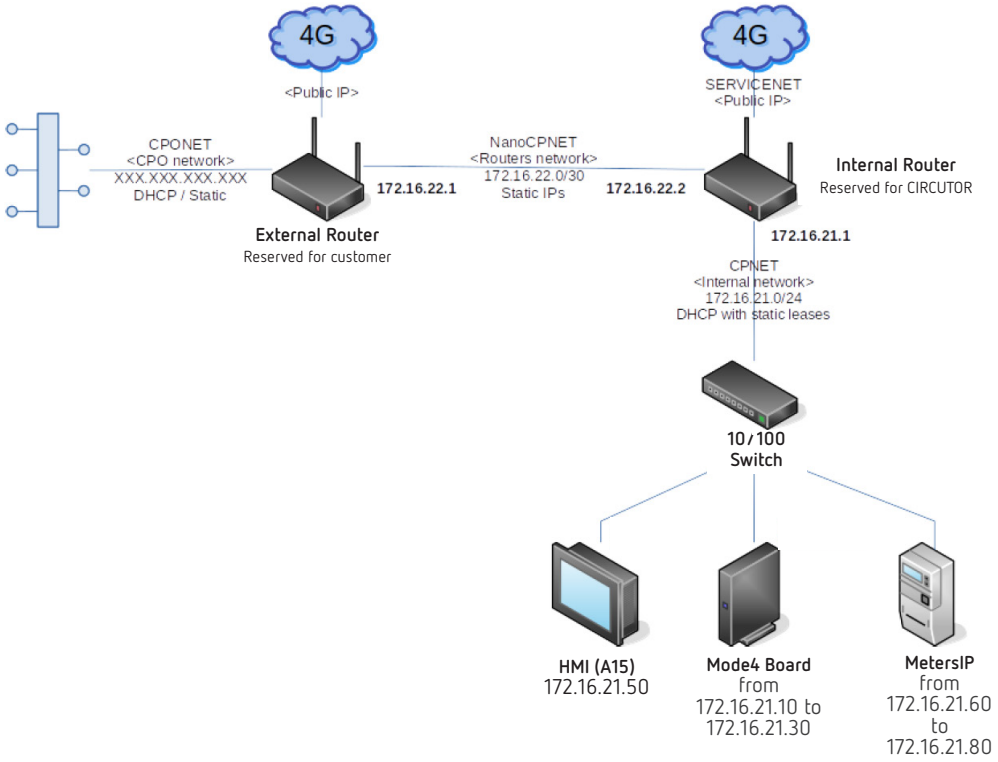

Figure 51: Network topology.

CPNET: Charging Point internal local network.

IP addresses: 172.16.21.0/24
DHCP: Internal router
Static assignments

NanoCPNET: Network between both routers.

IP addresses: 172.16.22.0/30
Static IP addresses:
172.16.22.1 (external router)
172.16.22.2 (internal router)

CPONET: Customer network (wired LAN or mobile network)

Unknown IP addresses.
Static IP addresses or DHCP assignment.

SERVICENET: CIRCUTOR network (4G mobile network)

Public IP address.
Static or dynamic IP addresses.

5.3.- INTERNAL NETWORK CONNECTIONS

Depending on where the connection to the Charging Point is made, it must be established in a different way:

5.3.1.- ON SITE

Connect the service PC to the Charging Point using an Ethernet cable, **Figure 52**.

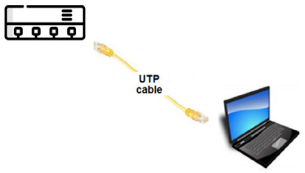

Figure 52: Connect the service PC.

Important: on the service PC:
- Enable DHCP
- Turn off Wi-Fi and any other connections, such as 4G networks.

At the Charging Point, the Ethernet cable can be connected to the Ethernet connection on the device or to the switch, as shown below:

1.- Connect the Ethernet cable to the dedicated Ethernet connection point, located to the right of the Charging Point power cable, **Figure 53**.

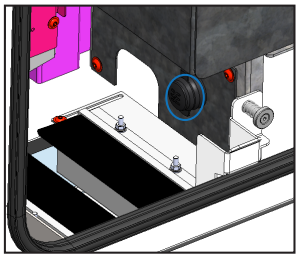

Figure 53: Connecting the Ethernet cable, step 1.

2.- Connect the Ethernet cable to an Ethernet port on the switch located on the right-hand door of the Charging Point, next to the modem (if there is more than one switch, connect the Ethernet cable to any of them), **Figure 54**.

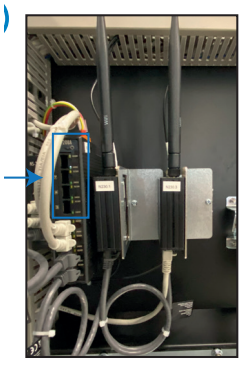

Figure 54: Connecting the Ethernet cable, step 2.

5.3.1.1.- Accessing the customer router web page

On the service PC, open a secure web browser and enter **https://172.16.22.1:7443.** The screen shown in **Figure 55** appears.

When prompted for authentication, use the following parameters and then click *Log in*.

User name: **admin**
Password: **Admin001**

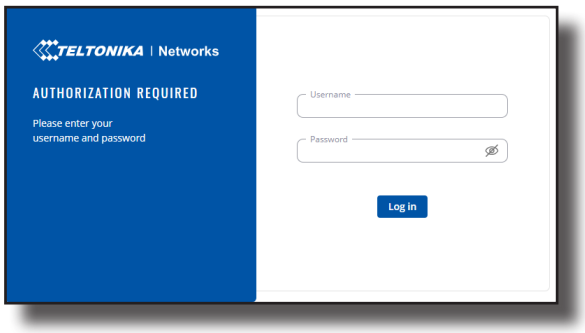

Figure 55: Authentication screen.

Once logged in successfully, almost any aspect of the router can be configured from here.

5.3.1.2.- Accessing the Charging Point configuration web page

On the service PC, open a secure web browser and enter **https://172.16.21.50**. The screen shown in **Figure 56** appears.

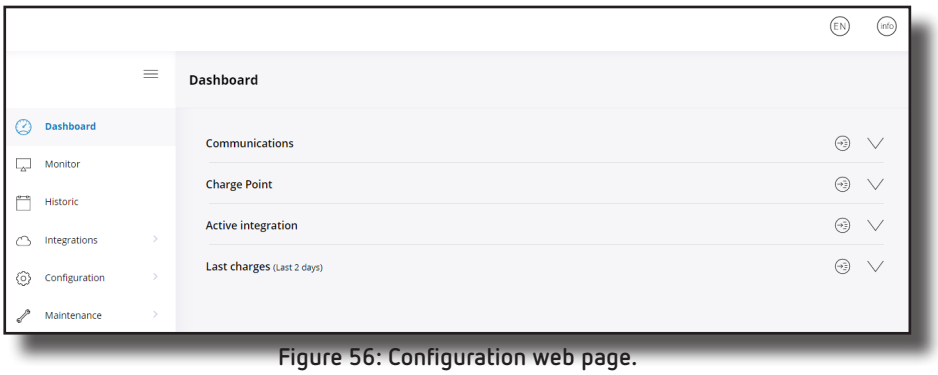

Figure 56: Configuration web page.

The web page that opens, **"Dashboard"**, displays the dashboard overview as the main screen, but many more options are available.

This is explained in detail in the DC Chargers User Manual.

5.3.2.- REMOTELY

Connect the service PC to the customer's network (via VPN, a wired network or 4G).

Note: *Ask the customer for the IP address of the Charging Point within their network (hereinafter referred to as **PublicIP**).*

5.3.2.1.- Accessing the customer router web page

According to the communication connection diagrams in section ***"5.1.- COMMUNICATIONS CONNECTION DIAGRAMS"***, if a dual modem with a 4G connection has been selected, the Charging Point can be connected to a backend system using a SIM card.

5.3.2.1.1.- Installing the SIM card in the customer's modem (labelled N230.3)

Insert the SIM card supplied by your ISP (Internet service provider). The correct orientation of the SIM card is shown in **Figure 57.**



Figure 57: SIM card installation.

1.- Press the SIM holder eject button.

2.- Remove the SIM holder.

3.- Insert the SIM card.

4.- Press the SIM holder.

After installing the SIM card, check that the 4G (mobile) antenna, Wi-Fi antenna and power connector are securely fastened.

Note: *The SIM card is not supplied with the device.*

5.3.2.1.2.- Configuring the APN on the SIM card (labelled N230.3)

1.- If connected to a 4G network, open a web browser and enter **https://PublicIP:7443**, to access the external modem, **Figure 58**.

When prompted for authentication, use the following parameters and then click *Log in*.
User name: **admin**;
Password: **Admin001**

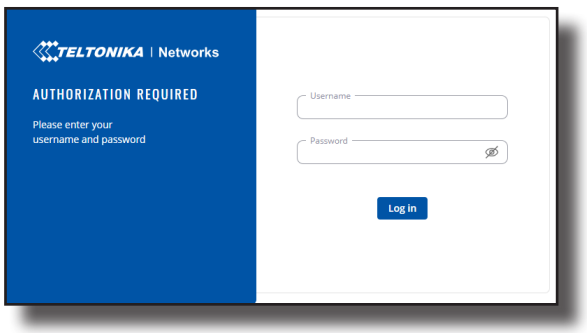

Figure 58: Authentication screen.

If you have logged in successfully, you can configure almost any aspect of your router from here.

2.- Go to **Status → Network → Mobile** and check the field ***'SIM card state'***, which should be set to **Inserted,** Figure 59.

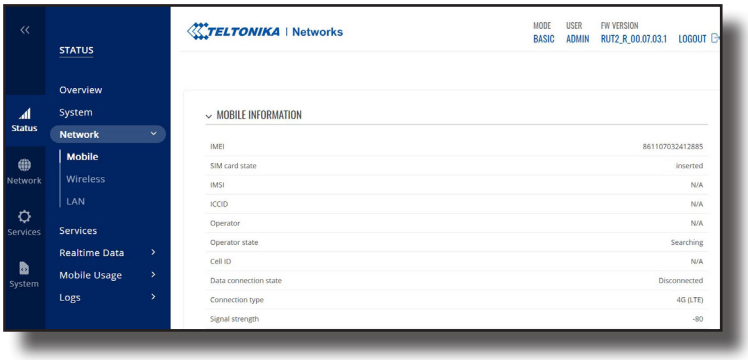

Figure 59: Check the SIM card state.

3.- Mobile network configuration. The mobile settings used when connecting to the local network can be configured here.

The procedure varies depending on the connection mode:

3.1.- Basic mode:

Go to **Network → WAN → mob1s1a1 →**  **(Figure 60)**

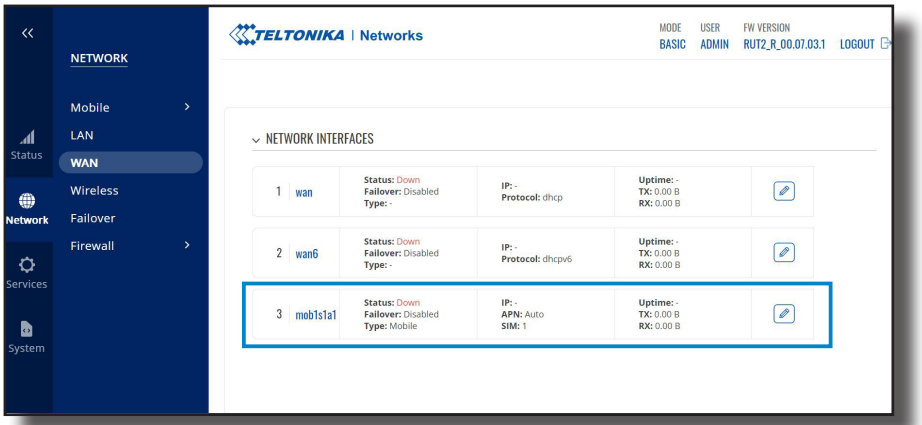

Figure 60: Mobile Network Configuration: Basic (Step 1).

Auto APN (on) → save & apply (Figure 61)

There is no need to enter an APN.

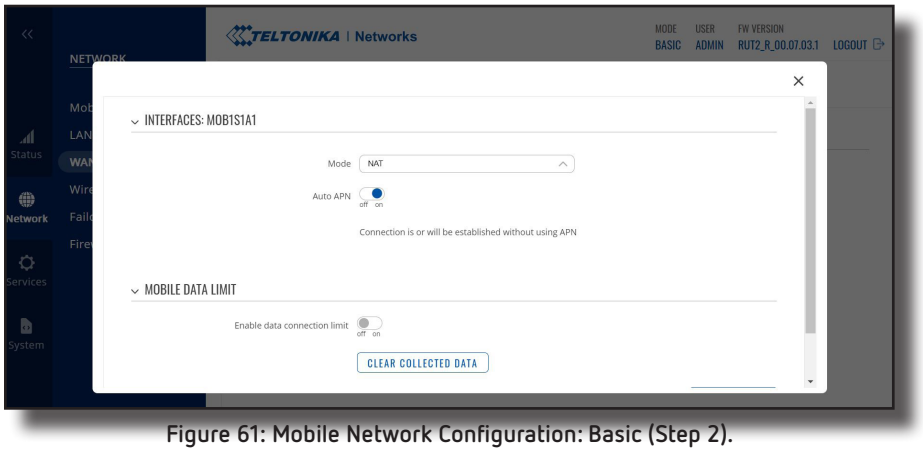

Figure 61: Mobile Network Configuration: Basic (Step 2).

Auto APN (off) → save & apply (Figure 62)

Enter the SIM provider's APN in the **Custom APN** field.

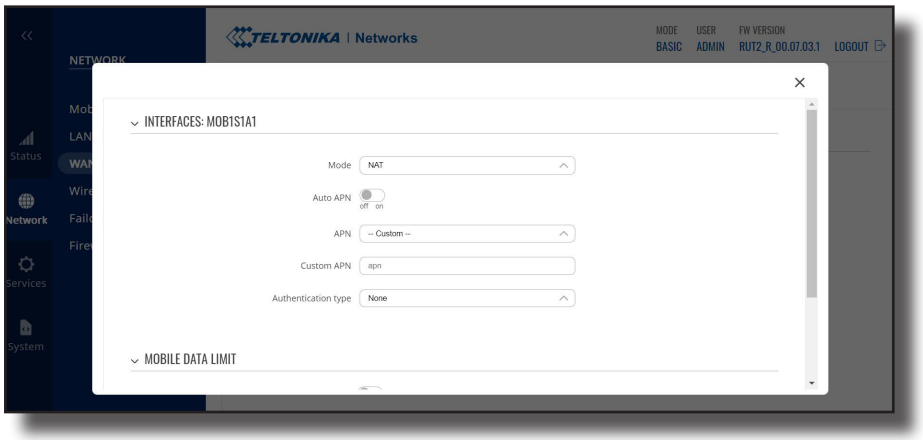

Figure 62: Mobile Network Configuration: Basic (Step 3).

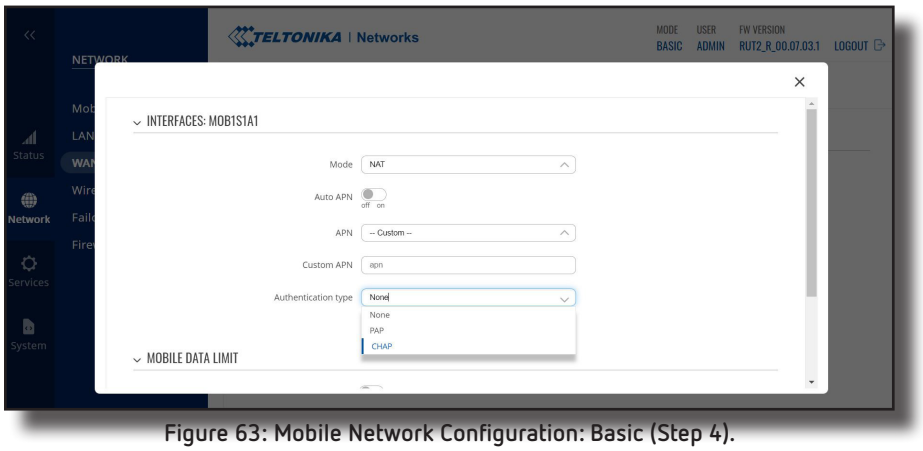

Figure 63: Mobile Network Configuration: Basic (Step 4).

Notes:

*If the SIM provider requires authentication, ask which type is required, **PAP** or **CHAP**, select it in the **Authentication method** field and enter a password and a username.*

*If any custom configuration needs to be made to the modem, contact the Support team at **CIRCUTOR** to obtain the Teltonika modem manual.*

3.2.- Advanced mode:

Go to **Network → Interfaces → General → mob1s1a1 →**  **(Figure 64)**

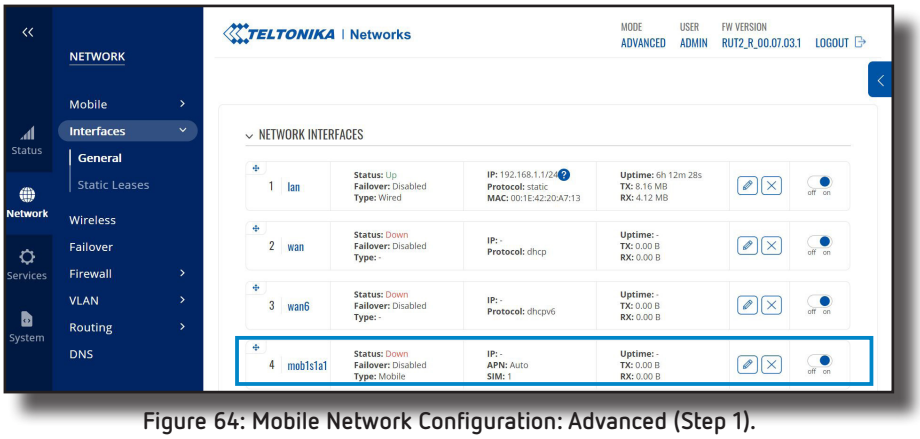

Figure 64: Mobile Network Configuration: Advanced (Step 1).

Auto APN (on) → save & apply (Figure 65)

There is no need to enter an APN.

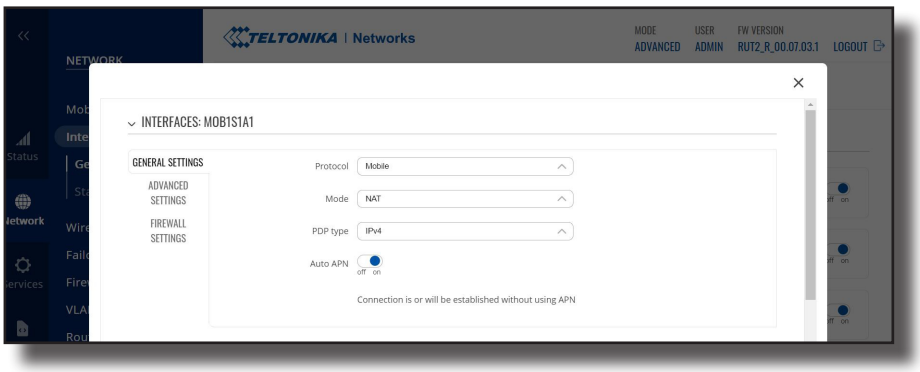

Figure 65: Mobile Network Configuration: Advanced (Step 2).

Auto APN (off) → save & apply (Figure 66)

Enter the SIM provider's APN in the **Custom APN** field.

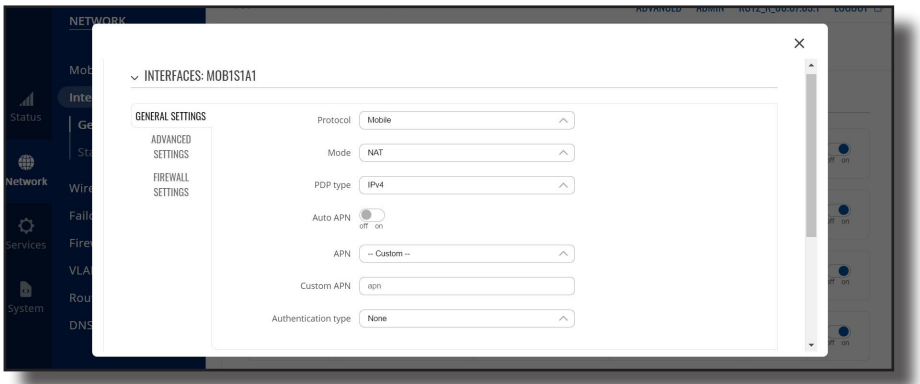

Figure 66: Mobile Network Configuration: Advanced (Step 3).

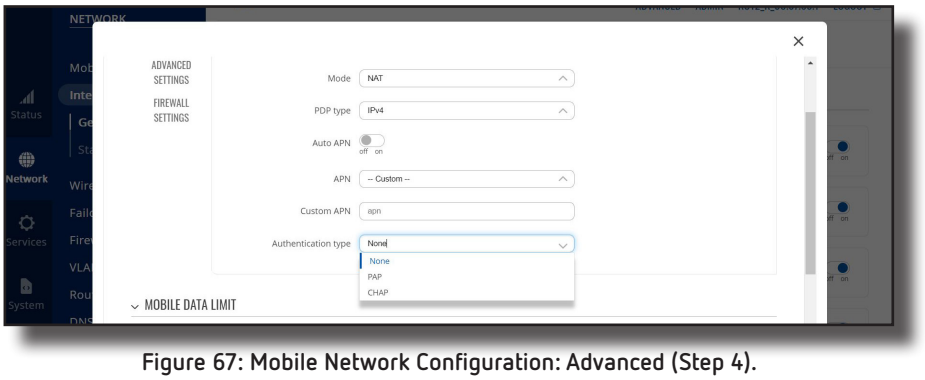

Figure 67: Mobile Network Configuration: Advanced (Step 4).

Notes:

If the SIM provider requires authentication, ask which type is required, PAP or CHAP, and select it in the ***Authentication method*** *and enter a password and a username.*

If any custom configuration needs to be made to the modem, contact the Support team at ***CIRCUTOR*** *to obtain the Teltonika modem manual.*

4.- To check whether the connection has been established successfully, follow these steps:

Go to **Status → Network → Mobile** and check **Data connection state,** which should be **"Connected", Figure 68.**

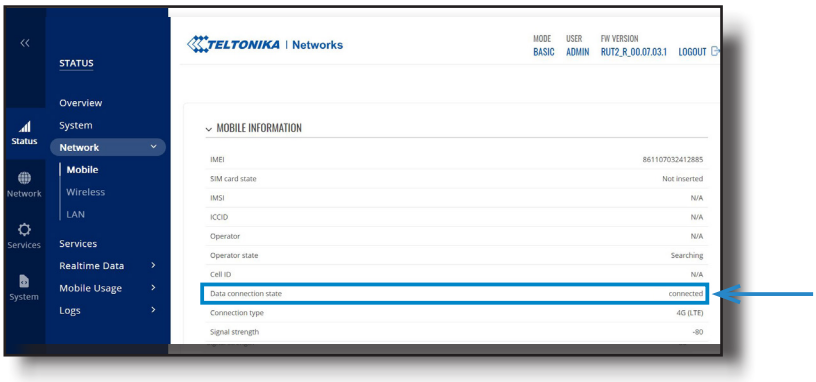

Figure 68: Mobile Network Configuration: Data connection state.

5.3.2.2.- Accessing the Charging Point configuration web page

On the service PC, open a secure web browser and enter **https://PublicIP:8443** or **http://PublicIP:8080.** The screen shown in **Figure 69** appears.

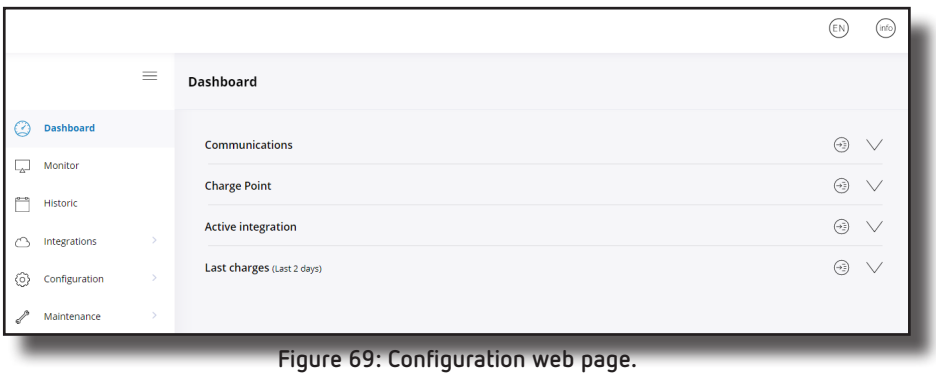

Figure 69: Configuration web page.

The web page that opens, **"Dashboard"**, displays the dashboard overview as the main screen, but many more options are available.

This is explained in detail in the DC Chargers User Manual.

5.4.- USING THE CHARGING POINT

A user manual is available for using the Charging Point. To obtain it, download it from the **CIRCUTOR** website or send an email to **sat@circutor.com**.



The device is intended for use by non-specialist users.

Installation and maintenance must be carried out by qualified personnel.

6.- TECHNICAL SPECIFICATIONS

AC power supply	
Network type	3P + N + PE
Nominal voltage (Un)	400 V ~ ± 10% 480 V ~ ± 10%
Frequency	50 / 60 Hz

Power supply protection requirements	
Rated insulation voltage (Ui)	440 V ~
Impulse withstand voltage (Uimp)	4 kV
Overvoltage category	III
Rated conditional short-circuit current (Icc)	10 kA

Input	
Maximum AC input current	142 A
Required supply capacity	86 kVA

Output		
Voltage range	RAPTION 80C CCS2 CCS2	RAPTION 80C CCS2 CHA
	CCS2: 150 - 920 V **CCS2:** 150 - 920 V	**CCS2:** 150 - 920 V **CHA:** 150 - 500 V
Maximum current	**CCS2:** 266 A **CCS2:** 266 A	**CCS2:** 266 A **CHA:** 200 A[9]
Maximum DC output power	**CCS2:** 80 kW **CCS2:** 80 kW	**CCS2:** 80 kW **CHA:** 80 kW[8]

[8] With the 5.5-metre cable length option, the maximum output power is 62.5 kW.

[9] With the 5.5-metre cable length option, the maximum output current is 125 A.

Electrical characteristics	
Power factor	≥ 0.99 at rated load
Total harmonic distortion (THD)	≤ 5%
Efficiency	> 96 % at maximum output power
Mains isolator	Switch-disconnector
Power limit control	by software

Connectivity	
Network connection	Ethernet 10/100BaseTX
Interface protocol	OCPP 1.6J / OCPP 2.0.1
EMEA wireless communication	Dual 4G LTE/WiFi Hotspot/GPRS/GSM

User interface	
HMI display	15" vandal-proof colour touchscreen
Status indicator lights	RGB colour indicator
RFID system	ISO/IEC 14443A (MIFARE Classic, MIFARE DESFire EV1)

Optional devices	
LATAM/APAC wireless communication	4G LTE/GPRS/GSM
Surge protection	Protection against sustained overvoltage IEC 61643-1 (class II)
Cable length	5.5 m
RFID extension	NFC, ISO/IEC 14443A/B, ISO/IEC 15693, ISO/IEC 18092, (Legic Advant, Legic Prime, Sony FeliCA, Calypso)

Optional devices	
Contactless payment	Integrated credit card payment terminal
Cable management system	Assisted cable system
Energy measurement	MID DC meter (LNE certification included)

Environmental characteristics	
Operating temperature	-30 °C ... +50 °C
Storage temperature	-40 °C ... +60 °C
Relative humidity	5 % ... 95 % Non-condensing
Maximum altitude	2000 m
IP protection rating	IP54
IK protection rating	IK10
Pollution degree	3 (internally reduced to 2)

Mechanical characteristics				
Connector type	RAPTION 80C CCS2 CCS2		RAPTION 80C CCS2 CHA	
	CCS2 L	CCS2 L	CCS2 L	CHA M
Weight	300 kg		300 kg	
Weight with cable management system	330 kg		330 kg	
Enclosure	Stainless steel			
Cable length	4 m	4 m	4 m	3.5 m
Dimensions	990 x 425 x 1810 mm			
Dimensions with cable management system	1150 x 500 x 1930 mm			
Cooling system	Fans			
Operating noise level	< 65 dB			

Protection	
Upstream protection	Type C MCB, RCD
Earthing system	TT, TN-S, TN-C, TN-C-S

Standards
IEC 61851-1; IEC 61851-23; IEC 61851-21-2; IEC 61851-24; IEC 62196-1; IEC 62196-3; CHAdeMO compatible; Complies with the CCS specification, DIN 70121. ISO 15118 (ready); Directives: 2014/53/EU; 2014/30/EU; 2014/35/EU; 4G modem complies with CE/RED; Complies with RoHS 2011/65/EU-2017/2102; Meter complies with 2014/32/EU

7.- MAINTENANCE AND TECHNICAL SERVICE

In the case of any query in relation to device operation or malfunction, please contact the **CIRCUTOR S.A.U.** Technical Support Service.

Technical Assistance Service
Vial Sant Jordi, s/n, 08232 - Viladecavalls (Barcelona)
Tel: +34 937 452 919
email: sat@circutor.com

8.- GUARANTEE

CIRCUTOR guarantees its products against any manufacturing defect for two years after the delivery of the units.

CIRCUTOR will repair or replace any defective factory product returned during the guarantee period.



• No returns will be accepted and no unit will be repaired or replaced if it is not accompanied by a report indicating the defect detected or the reason for the return.
• The guarantee will be void if the units has been improperly used or the storage, installation and maintenance instructions listed in this manual have not been followed. "Improper usage" is defined as any operating or storage condition contrary to the national electrical code or that surpasses the limits indicated in the technical and environmental features of this manual.
• **CIRCUTOR** accepts no liability due to the possible damage to the unit or other parts of the installation, nor will it cover any possible sanctions derived from a possible failure, improper installation or "improper usage" of the unit. Consequently, this guarantee does not apply to failures occurring in the following cases:
- Overvoltages and/or electrical disturbances in the supply;
- Water, if the product does not have the appropriate IP classification;
- Poor ventilation and/or excessive temperatures;
- Improper installation and/or lack of maintenance;
- Buyer repairs or modifications without the manufacturer's authorisation.

CIRCUTOR S.A.U.
Vial Sant Jordi, s/n
08232 - Viladecavalls (Barcelona)
Tel: (+34) 93 745 29 00
www.circutor.com central@circutor.com