CONTROLLER FOR THYRISTOR SWITCHED CAPACITOR BANKS CPCb

INSTRUCTIONS MANUAL

(M98120901-20 / 21A)

(c) CIRCUTOR S.A.

INDEX

1 INTRODUCTION 2
1.1 DELIVERY SPOT CHECK 2
2 GENERAL DESCRIPTION 2
3 TYPES 3
4 TECHNICAL CHARACTERISTICS 3
4.1 CHARACTERISTICS OF THE CONTROL CIRCUIT 3
5 OPERATING CHARACTERISTICS (SOFTWARE VERS. 2.0) 4
5.1 TEST MODE START-UP. 4
5.2 ON MODE START-UP 5
5.3 ON MODE 5
5.4 OFF MODE. 5
5.5 CONTROLLER SAFETY 5
6 DIMENSIONS. 6
7 USE OF CPCB AS SPARE OF OLD CPC AND CPCM 7
8 CONNECTION WIRE DIAGRAM 9
9 TECHNICAL SERVICE 10

1 INTRODUCTION

This manual is issued to help the **CPCb** users to connect and use the controller in order to get the best features of thyristor driven capacitor banks. The CPCb have been manufactured and tested in our factory under standard working conditions. Any special application must be discussed with CIRCUTOR Technical Department.

1.1 Delivery spot check

After receiving the unit please check the following points:

(a) The delivered device is according to your order specifications?
(b) Check if any damage has occurred during the shipment process.
(c) Check that the delivered product is the suitable type for your application (supply voltage, power circuit voltage, etc)

2 GENERAL DESCRIPTION

The **CPCb** board is a new enhanced version of CPC and CPCm. The main difference with the later is that it can be supplied at 230 or 400V indistinctly. It is used for the ON – OFF switching control of capacitor steps, driven by thyristor switches. The use of thyristor switches allows a fast, transient free, PF compensation.

Each CPCb board can drive a three phase or single phase capacitor or and L+C detuned filter step. Usually, the complete capacitor bank or filter consists of several steps , controlled by a fast PF regulator, like COMPUTER6f, 8f or 14f

The main improvements introduced in the CPCm and CPCb versus the CPC, are:

a) Firing pulses coupled through a pulse transformer. This gives a better isolation between the power block and the electronic driver.

b) Microprocessor control, with intelligent algorithm which takes care of different anomalous situations.

3 TYPES

The table below shows the standard types of CPCb controller boards :

CODE	TYPE	SUPPLY		CHARACTERISTICS
		V	CONNEC	
445163	CPCb-230-400E	230- 400 Vac	External	3 input terminals: 0 - 230V - 400V.

4 TECHNICAL CHARACTERISTICS

CPCb supply terminals	External 0 – 230 – 400 terminals)
Standard Voltages	230 Vac / 400 Vac (bitensional) (other values up to 690Vac , on request)
Frequency	50 / 60 Hz indistinctly
Maximum ambient temperature	40 ºC
ON-OFF control	By means of an isolated contact , closing the ACT- COM terminals . See paragraph 4.1

4.1 Characteristics of the control circuit.

COM – ACT Terminals	GREEN LED	STATIC SWITCH STATUS
OPEN CIRCUIT	OFF	OPEN (Disabled)
CLOSED CIRCUIT	ON	CLOSED (Enabled)
Open circuit voltage between COM-ACT		24 Vcc , ±15%
Current at the COM-ACT circuit when shorted		24 mA, cc

5 OPERATING CHARACTERISTICS (Software vers. 2.0)

- The CPCb has two input terminals (COM-ACT) to control the ON-OFF operation of the static switch (see paragraph 4.1). The connection and disconnection of the static switch is enabled and disabled by means of an external isolated contact, either from an electromechanical relay or from a static relay (the later is the case of the COMPUTER 8df and COMPUTER 14df regulators)
- Once enabled, the connection of each phase to the mains will take place at zero voltage crossing of the corresponding switch. The disconnection takes place when the current reaches zero after disabling the CPCb. Notice that the three phases do not connect neither disconnect simultaneously.
- The CPCb takes the supply voltage through an isolation transformer.
- The synchronism signals for the zero voltage detection are isolated through opto couplers and the firing signals are coupled through pulse transformers, so that the control circuits are totally isolated from the power circuits.

5.1 Test mode start-up.

After connecting the CPCb to the supply, if COM-ACT are open (switch disabled), the controller starts in test mode. The behaviour in such mode is as follows:

- The green LED will be OFF as corresponds to the “disabled” condition.
- If zero crossings of voltage are detected in all the three phases , all the red LEDs will remain OFF.
- In case that a certain phase does not give the synchronism signal at zero crossing, the red LED of such phase will start blinking. This may be due to a supply default at the power block or to a pre-charged capacitor or to a short in the corresponding thyristor.

5.2 ON mode start-up

- If the COM-ACT terminals are shorted when the supply is connected to the CPCb, the controller will start directly in ON mode, skipping the test.

5.3 ON mode

- Once in the ON mode and while the enable signal remains (COM-ACT shorted), the CPCb will fire the thyristors each time it detects a zero of voltage across the switch. If the current is stopped by external causes, the controller will repeat the firing of thyristors.
- The three red LED will be ON if at least one of the phases detects zero crossing signal. If not, the red LEDs will be extinguished.

5.4 OFF mode.

- If the COM-ACT circuit is disabled (open), the switch will remain open. In these circumstances all the LEDs are OFF.

5.5 Controller safety.

- The CPCb microcontroller uses a “watch dog” timer for each phase to monitor the time between firings. The timer is reset each time that a zero crossing is detected. If more than 25 ms elapse without firing a phase, the system does not fire until a new zero crossing situation is detected,
- After connecting the CPCb to the supply the firing is disabled during 2 seconds to allow the supply voltage to reach the steady value. This prevents against false firings in case of short supply interruptions.
- In case that the current at the switch is stopped by external causes before the end of ½ cycle, the CPCb will detect the situation and will re-fire the switch.

6 DIMENSIONS.

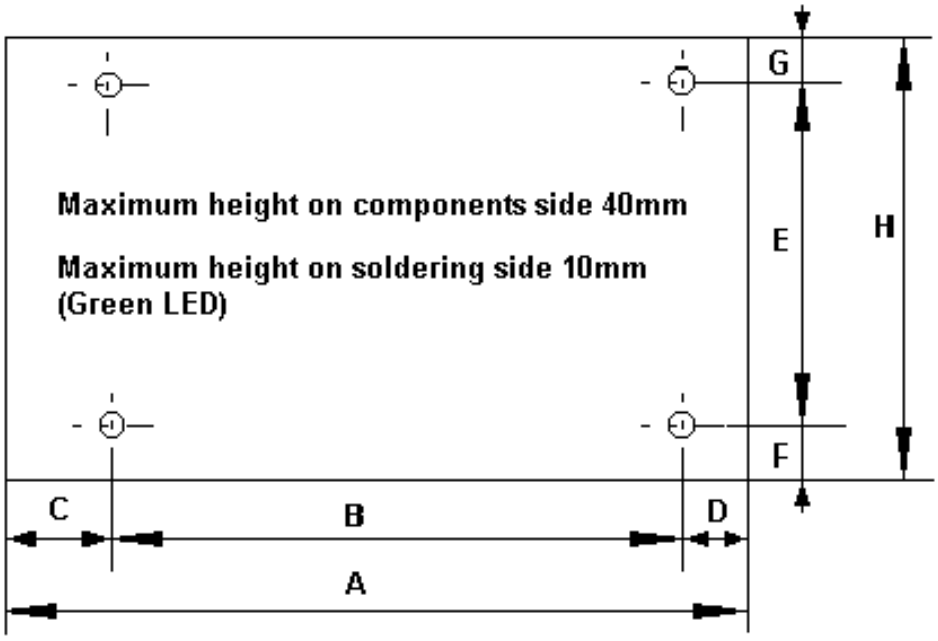

A= 200 ; B=170 ; C=20 ; D=10

H=100 ; E=80 ; F=G=10

Figure 1.- Dimensions of CPCb board

7 USE OF CPCb AS SPARE OF OLD CPC and CPCm

The CPCb driver is functionally compatible with CPC and CPCm, i.e. it may be used to replace them and performs the same function. Nevertheless, when making the replacement, the following points must be checked: (see also figures 2 and 3)

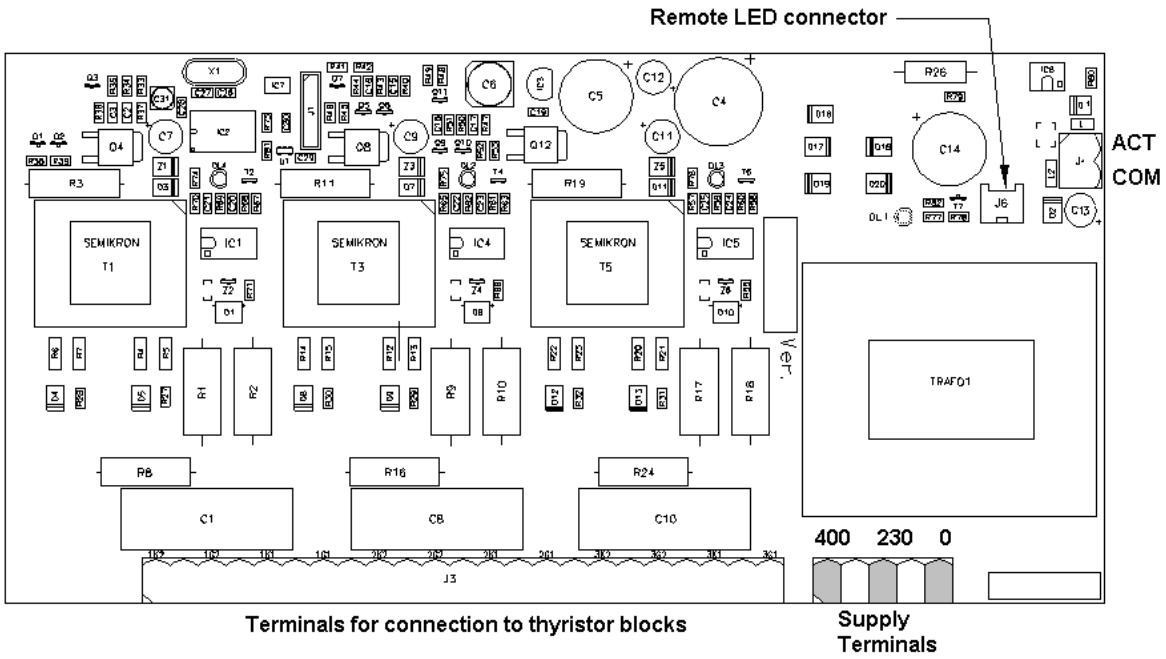

Figure 2.- Components layout in CPCb board.

- **Replacement of CPCm by a CPCb:** The supply strip of 2 terminals 10,16 pitch must be changed by a 3 terminal strip, 10,16mm pitch. Care must be taken to connect cables to the proper supply terminals
- **Replacement of CPC...I by a CPCb.** Old types CPC-400I and CPC-230I controller cards had an internal connection to the supply voltage. That means that when one of those has to be replaced by a CPCb, two supply cables from an external supply must be connected to the corresponding terminals at supply strip 0-230-400. Terminals are placed on a three 10,16mm pitch terminal strip. Also COM-ACT terminal strip must be replaced by a two terminal strip, 5,08mm pitch.
- **Replacement of CPC-230E by CPCb :** The supply terminal strip of CPC...E (two terminals, 5,08mm pitch) must be replaced by a three terminal strip, 10,16mm pitch. Also the COM-ACT terminal strip (two terminals, 10,16mm pitch) must be replaced by a two terminal, 5,08mm pitch.
- **Dimensions.** CPCb boards are larger than the old CPC boards (see drawing in figure 1). The dimensions between the fixing holes remain unchanged, but the C dimension has increased from 5mm to 20mm and the D dimension has changed from 5mm to 10mm. Moreover the height on the components side of CPCb has increased from 30mm to 40mm compared with old CPC and CPCm
- The terminal strip connecting the CPCb to thyristor terminals is 100% interchangeable with the old CPC and CPCm terminal strip

8 CONNECTION WIRE DIAGRAM

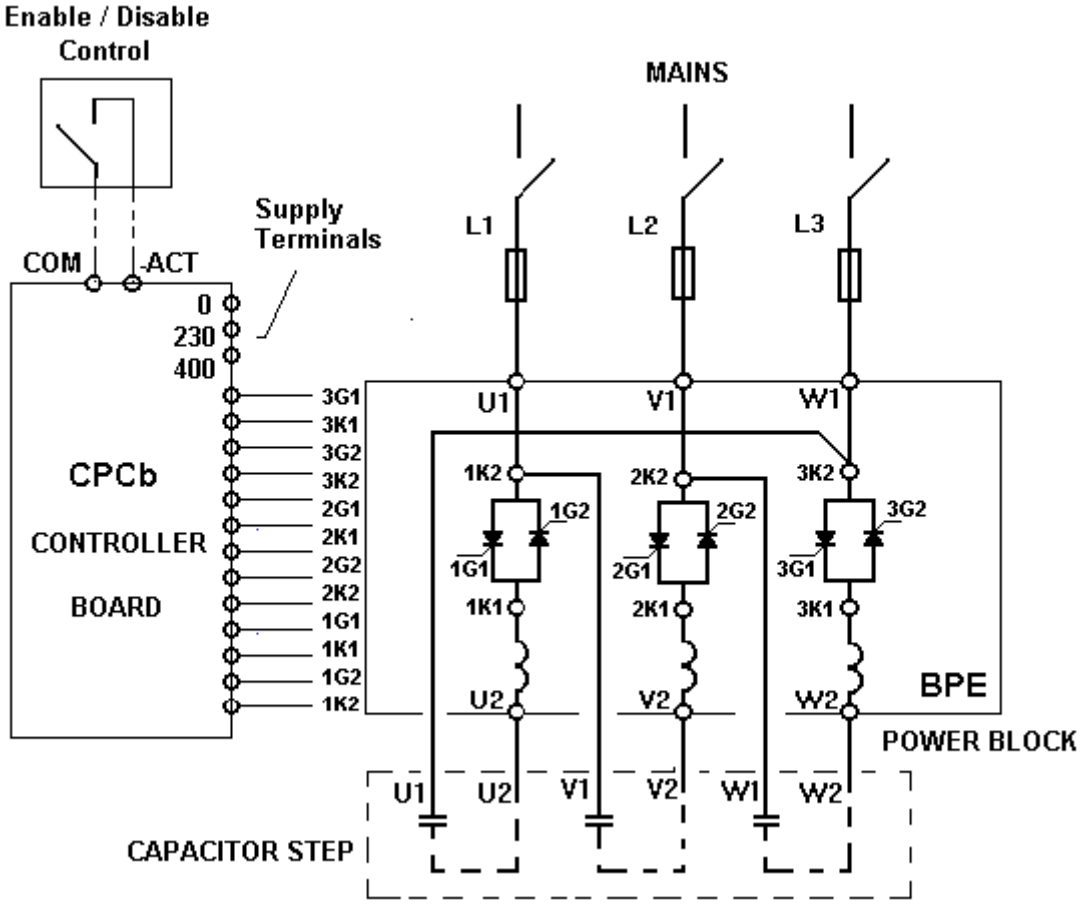

Figure 3.- Connection wire diagram

9 TECHNICAL SERVICE

In case of any question at start up or in case of trouble, please contact the technical service of CIRCUTOR S.A.

CIRCUTOR S.A , Technical Service
Vial Sant Jordi, s/n
08232 - Viladecavalls (SPAIN)
tel – (+34) 93 745 29 00
Fax - (+34) 93 745 29 14

e-mail: central@circutor.com
web : www.circutor.com